XS6 Series

Submersible electropumps and motors for 6” wells

Technical Guide

50 Hz

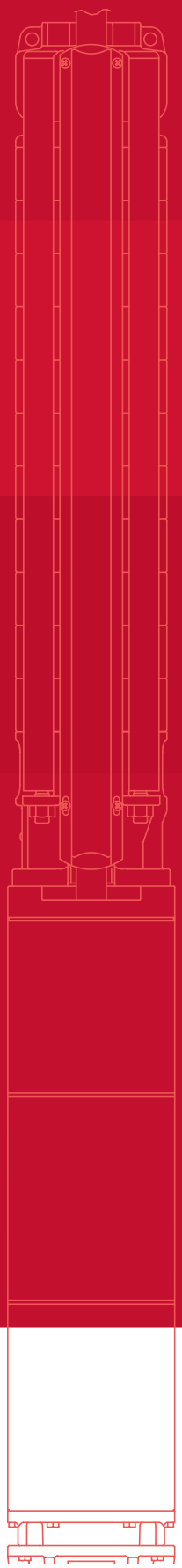

ESPA
Innovative Solutions

Submersible electropumps and motors for 6” wells XS6 series

The **XS6** pump is a submersible pump for deep 6” wells. Can be coupled to any motor meeting the NEMA standard.

Sectors of application: Civil, agricultural and industrial.

- Water supply from deep wells.
- Pressurisation and distribution in civil and industrial facilities.
- Supply for autoclaves and cisterns.
- Fire-prevention and washing systems.
- Water table control
- Irrigation.
- Mines.
- Golf.

Range of application ⇢ XS6 at 2900 rpm

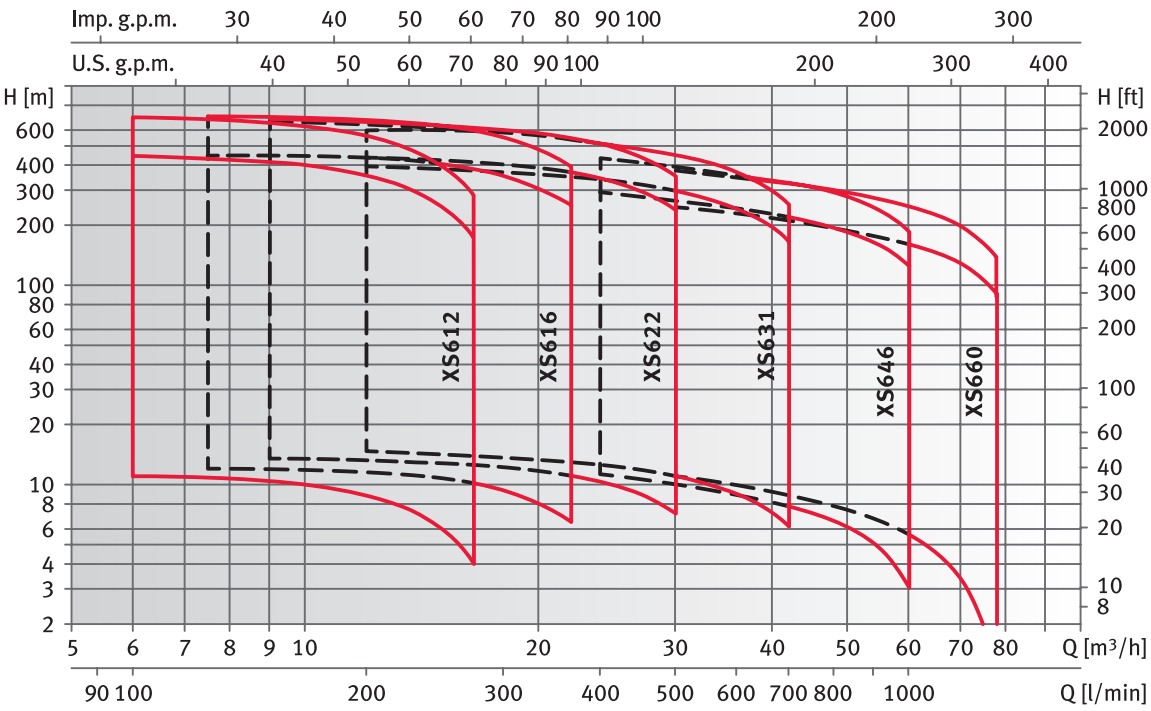

Curves obtained in accordance with ISO 9906 appendix A

Description

- The **XS6** pump is a submersible pump for deep 6” wells.
  Maximum content of sand in water 100 g/m³.
  Can be coupled to any motor meeting the NEMA.
  Easy to dismantle.
  Great resistance to corrosion.

Technical data

- Flow: up to 78 m³/h.
- Height: up to 700 m.
- Total maximum diameter of pump:
  Standard version: 142 mm (1 cable sheath is included).
  Raised height version: 177 mm (1 cable sheath and coupling with 6” motor included) and 193 mm (1 cable sheath and coupling with 8” motor included).
- Maximum depth of immersion for electropumps:
  350 m (with **E6W** and **CP8**).
- Maximum quantity of sand tolerated in the water 100 g/m³.
- Standard discharge nozzle:
  Standard version:
  Rp 2 1/2” for versions **XS6**12 - **XS6**16 - **XS6**22
  Rp 3” for versions **XS6**31 - **XS6**46 - **XS6**60
  Raised height version:
  Rp 3” for **XS6**12 - **XS6**16 - **XS6**22 - **XS6**31
  Rp 4” for **XS6**46 - **XS6**60.
- All the pumps are able to operate in horizontal position (see operating limits in the motors section).

Motor characteristics

- Three-phase asynchronous **E6W** and **CP8** motors in a coolant liquid (see operating limits in the motors section).

Build specifications

- Robust and lightweight, easy to maintain and resistant to corrosion in non-aggressive atmospheres.
- Head and motor support made of microcast stainless steel.
- Discharge nozzle fitted with holes for safety hooks and blocking screws for the discharge pipe.
- Built-in, stainless steel, non-return valve.
- Stainless steel impellers and diffusers.
- Stainless steel impeller with detachable wear ring.
- Upper and middle bearing made of tungsten carbide.
- Shaft guide bearings made of technopolymer and included in each stage.
- Centring wear rings made of technopolymer and built into each stage.
- Stainless steel suction support.
- Stainless steel shaft protected by stainless steel shaft casing.
- Replaceable joint.
- The combination:
  Tungsten carbide guide bearing, floating technopolymer wear rings, shaft protected by shaft casing; guarantees maximum resistance to wear and tear, assuring constant operation and stability in terms of hydraulic performance.

Manufactured on request

- Different materials.
- Rp 4” and 3” and 4” NPT discharge nozzles.
- Star/triangle start-up versions (SD).
- Different voltages and frequencies.
- High temperature versions.

Accessories

- Coupling flange.
- Panels.
- Descending cables.

XS6 series

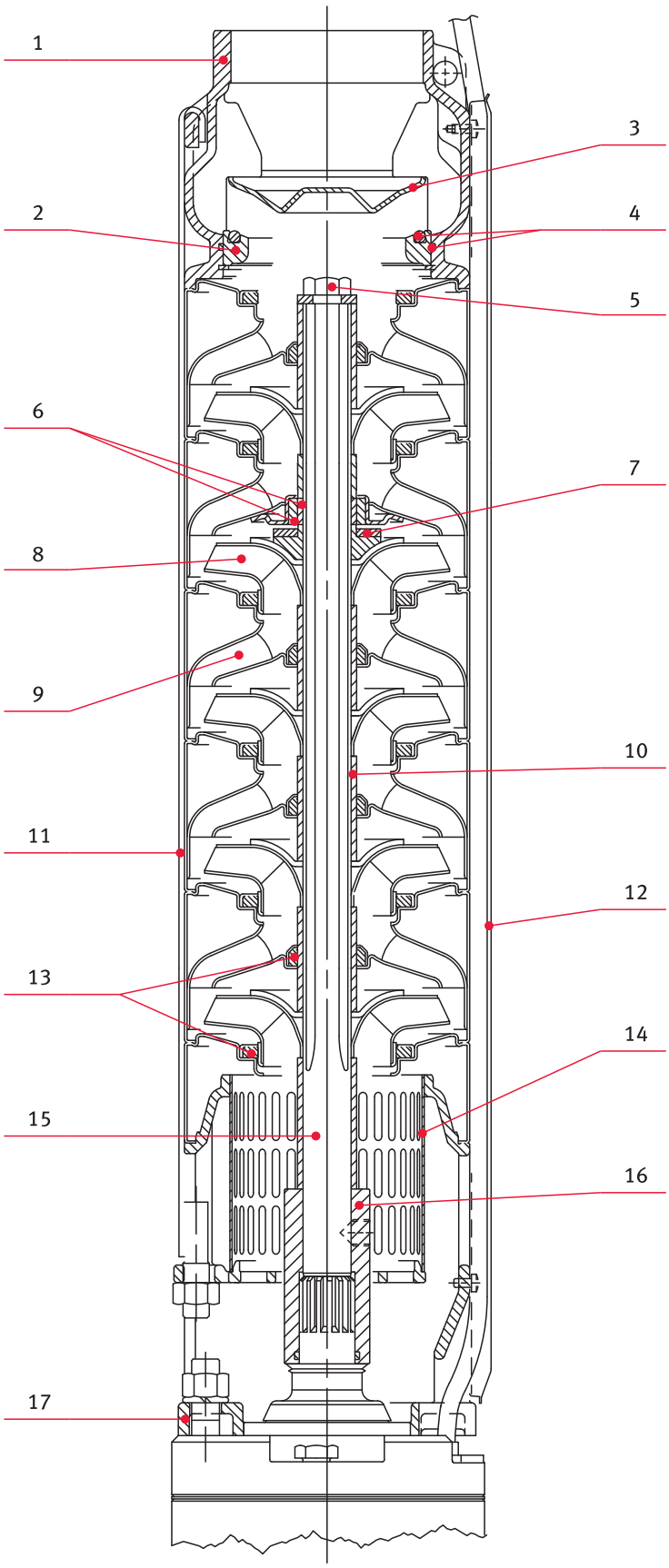

XS6 series

REF N.	DESCRIPTION	Materials	REF. STANDARDS EUROPE	REF. STANDARDS USA
1	Discharge nozzle	Stainless steel	EN 10213-4 - GX5CrNi19-10 (1.4308)	ASTM CF-8 (cast AISI 304)
2	Valve seating	Stainless steel	EN 10213-4 - GX5CrNi19-10 (1.4308)	ASTM CF-8 (cast AISI 304)
3	Valve	Stainless steel	EN 10088-1 - X5CrNi18-10 (1.4301)	AISI 304
4	Elastomers	EPDM		
5	Screws	Stainless steel	EN 10088-1 - X5CrNi18-10 (1.4301)	AISI 304
6	Shaft casing and bushing	Tungsten carbide		
7	Shaft box support	PTFE + GRAFITE		
8	Impeller	Stainless steel	EN 10088-1 - X5CrNi18-10 (1.4301)	AISI 304
9	Diffuser	Stainless steel	EN 10088-1 - X5CrNi18-10 (1.4301)	AISI 304
10	Spacer	Stainless steel	EN 10088-1 - X17CrNi16-2 (1.4057)	AISI 431
11	Tensor	Stainless steel	EN 10088-1 - X5CrNi18-10 (1.4301)	AISI 304
12	Cable sheaths	Stainless steel	EN 10088-1 - X5CrNi18-10 (1.4301)	AISI 304
13	Friction rings	PPO Tecnopolymer		
14	Filter	Stainless steel	EN 10088-1 - X5CrNi18-10 (1.4301)	AISI 304
15	Shaft	Stainless steel	EN 10088-1 - X17CrNi16-2 (1.4057)	AISI 431
16	Joint	Stainless steel	EN 10088-1 - X17CrNi16-2 (1.4057)	AISI 431
17	Lower support	Stainless steel	EN 10213-4 - GX5CrNi19-10 (1.4308)	ASTM CF-8 (cast AISI 304)

XS6N series

REF N.	DESCRIPTION	Materials	REF. STANDARDS EUROPE	REF. STANDARDS USA
1	Discharge nozzle	Stainless steel	EN 10213-4 - GX5CrNiMo19-11-2 (1.4408)	ASTM CF-8M (cast AISI 316)
2	Valve seating	Stainless steel	EN 10213-4 - GX5CrNiMo19-11-2 (1.4408)	ASTM CF-8M (cast AISI 316)
3	Valve	Stainless steel	EN 10088-1 - X2CrNiMo17-12-2 (1.4404)	AISI 316L
4	Elastomers	EPDM		
5	Screws	Stainless steel	EN 10088-1 - X5CrNiMo17-12-2 (1.4401)	AISI 316
6	Shaft casing and bushing	Tungsten carbide		
7	Shaft box support	PTFE + GRAFITE		
8	Impeller	Stainless steel	EN 10088-1 - X2CrNiMo17-12-2 (1.4404)	AISI 316L
9	Diffuser	Stainless steel	EN 10088-1 - X2CrNiMo17-12-2 (1.4404)	AISI 316L
10	Spacer	Duplex stainless steel	EN 10088-1 - X2CrNiN23-4 (1.4362)	UNS S32304
11	Tensor	Stainless steel	EN 10088-1 - X2CrNiMo17-12-2 (1.4404)	AISI 316L
12	Cable sheaths	Stainless steel	EN 10088-1 - X2CrNiMo17-12-2 (1.4404)	AISI 316L
13	Friction rings	PPO Tecnopolymer		
14	Filter	Stainless steel	EN 10088-1 - X2CrNiMo17-12-2 (1.4404)	AISI 316L
15	Shaft	Duplex stainless steel	EN 10088-1 - X2CrNiMoN22-5-3 (1.4462)	UNS S31803
16	Joint	Duplex stainless steel	EN 10088-1 - X2CrNiN23-4 (1.4362)	UNS S32304
17	Lower support	Stainless steel	EN 10213-4 - GX5CrNiMo19-11-2 (1.4408)	ASTM CF-8M (cast AISI 304)

Electropump identification data

[ ] XS6 22 08 D – 6

- 6: 4 = 4” motor coupling; 6 = 6” motor coupling; 8 = 8” motor coupling
- D: Raised height version
- 08: Number of stages
- 22: Nominal flow in m³/h
- XS6: XS6 = AISI 304 version; XS6N = AISI 316 version
- [ ]: Null = 50 Hz / 6 = 60 Hz

EXAMPLE: XS622 08 - 6
6” 50 Hz pump in AISI 304, nominal flow 22 m³/h, 8 stages, with coupling flange and 6” motor.

Electropump identification data

[ ] XS6 22 08 D – E6W

- E6W: Raised height version
- D: Motor type identification data
- 08: Number of stages
- 22: Nominal flow in m³/h
- XS6: XS6 = AISI 304 version; XS6N = AISI 316 version
- [ ]: Null = 50 Hz / 6 = 60 Hz

EXAMPLE: XS622 08 - E6W
6” 50 Hz pump in AISI 304, nominal flow 22 m³/h, 8 stages, coupled to 6” E6W motor.

XS6 series

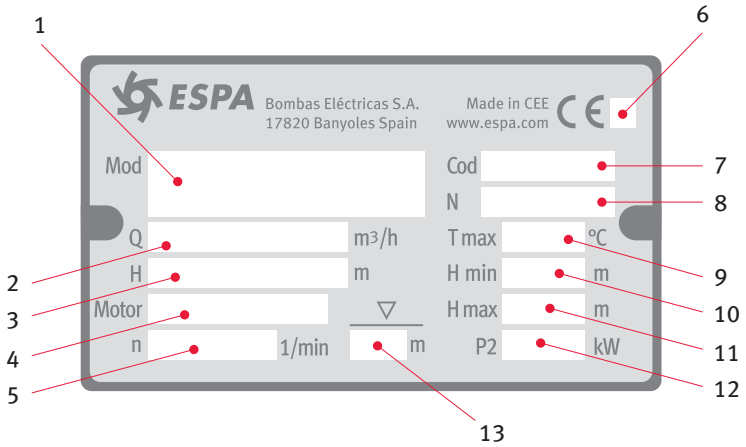

Legend

1. Electropump type
2. Flow range
3. Height range
4. Type of motor
5. Speed
6. Year of manufacture
7. Code
8. Serial number
9. Maximum operating temperature
10. Minimum height
11. Maximum height
12. Nominal rating
13. Depth

XS6 series

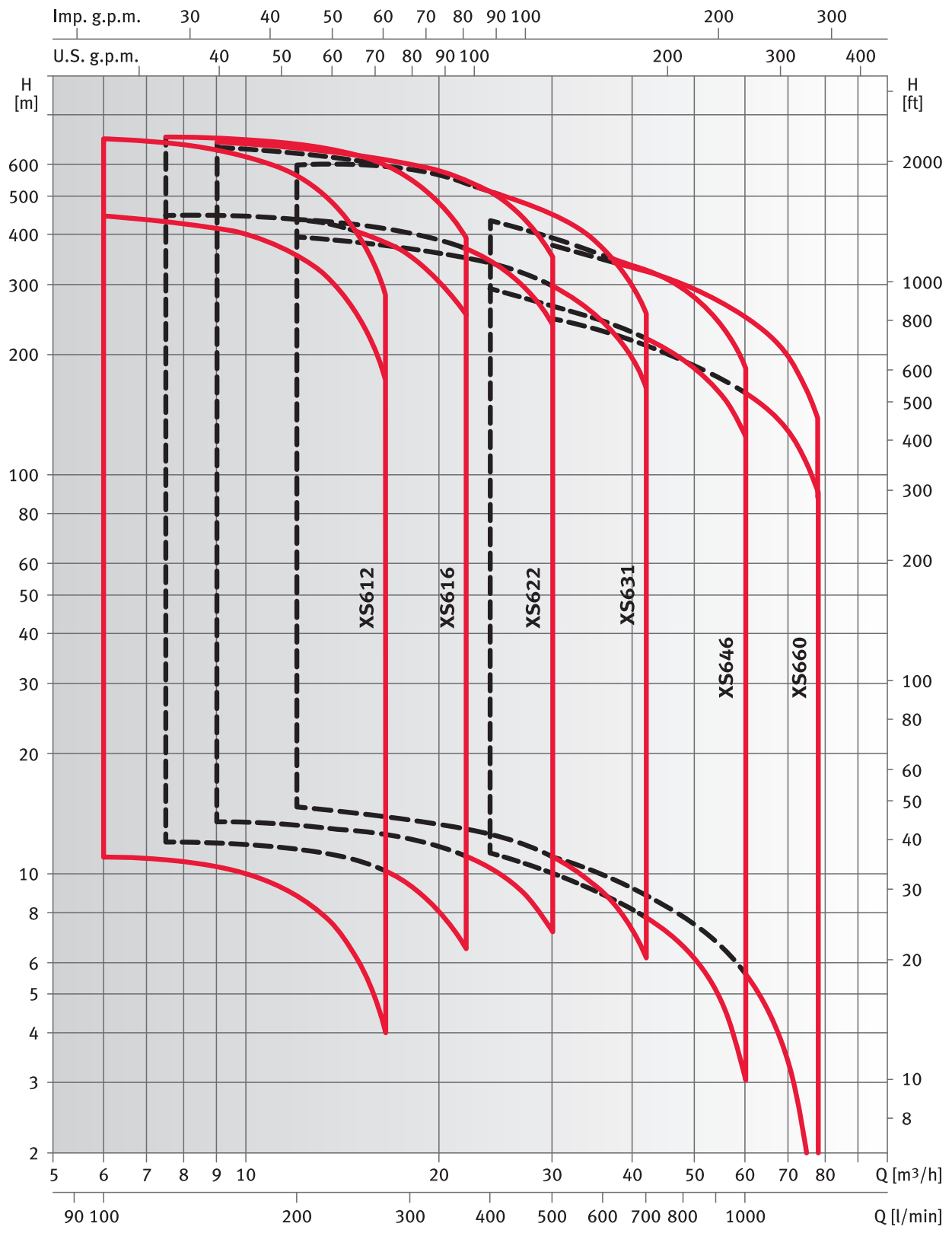

Pump performance valid for liquids with a density of $\rho = 1{,}0$ kg/dm³ and kinematic viscosity of $\upsilon = 1$ mm²/s.

XS6 Series

Operating dimensions, weights and curves

50 Hz

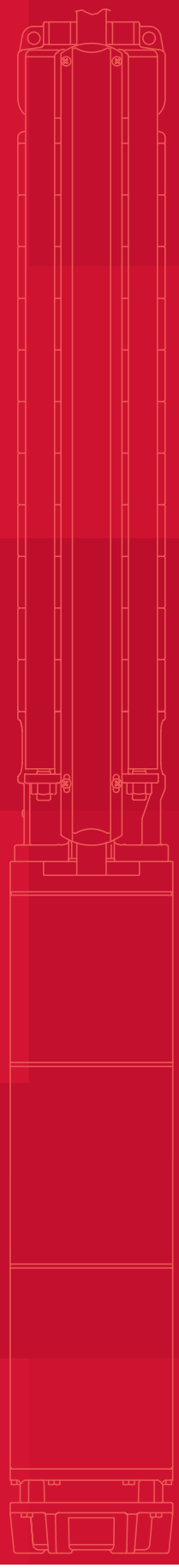

XS612 series from 1 to 19 stages

PUMP	P2	l/min	0	100	150	200	250	275
TYPE	kW	m³/h	0	6	9	12	15	16.5
XS612 01	0.55		11.5	11.1	10.4	8.9	6	4
XS612 02	1.1		23.1	22.2	20.8	17.7	12.1	8.1
XS612 03	1.5		34.7	33.3	31.2	26.5	18.1	12.1
XS612 04	2.2		46.3	44.4	41.6	35.3	24.1	16.1
XS612 05	3		59	57.6	54.6	47.2	33.5	23.7
XS612 06	3		70.3	68.3	64.4	55.4	38.9	27
XS612 07	4		82.5	80.7	76.4	66.1	46.9	33.2
XS612 08	4		94	91.4	86.2	74.2	52.2	36.5
XS612 09	5.5		107.2	105.1	99.7	86.5	61.8	44.1
XS612 10	5.5		117.7	115.1	108.9	94.2	66.9	47.3
XS612 11	5.5		129.2	125.9	118.9	102.5	72.3	50.7
XS612 12	7.5		141.3	138.3	131	113.4	80.6	57.1
XS612 13	7.5		152.8	149.1	141	121.7	86.1	60.5
XS612 14	7.5		164.2	159.9	150.8	129.9	91.3	63.8
XS612 15	7.5		175.6	170.4	160.5	137.7	96.3	66.8
XS612 16	9.3		188	183.7	173.7	150	106.1	74.7
XS612 17	9.3		199.4	194.4	183.5	158.1	111.5	78
XS612 18	9.3		210.9	205.1	193.3	166.1	116.5	81
XS612 19	9.3		222.3	215.6	202.8	173.9	121.4	83.9

XS612 series dimensions and weights

PUMP	P2	DIMENSIONS (mm)					WEIGHT
TYPE	kW	L	LM	LP	ø D		
					1 cable	2 cables	kg
XS612 01-4	0.55	616	236	380	142	144	16
XS612 02-4	1.1	712	286	426	142	144	19
XS612 03-4	1.5	820	348	472	142	144	23
XS612 04-4	2.2	911	393	518	142	144	25
XS612 05-4	3	1108	544	564	142	144	34
XS612 06-4	3	1154	544	610	142	144	36
XS612 07-4	4	1270	614	656	142	144	40
XS612 08-4	4	1316	614	702	142	144	41
XS612 09-4	5.5	1432	684	748	142	144	45
XS612 10-4	5.5	1478	684	794	142	144	47
XS612 11-4	5.5	1524	684	840	142	144	48
XS612 12-4	7.5	1650	764	886	142	144	51
XS612 13-4	7.5	1696	764	932	142	144	52
XS612 14-4	7.5	1742	764	978	142	144	53
XS612 15-4	7.5	1788	764	1024	142	144	55
XS612 07-6	4	1239	583	656	144	146	54
XS612 08-6	4	1285	583	702	144	146	55
XS612 09-6	5.5	1361	613	748	144	146	61
XS612 10-6	5.5	1407	613	794	144	146	62
XS612 11-6	5.5	1453	613	840	144	146	63
XS612 12-6	7.5	1539	653	886	144	146	68
XS612 13-6	7.5	1585	653	932	144	146	69
XS612 14-6	7.5	1631	653	978	144	146	70
XS612 15-6	7.5	1677	653	1024	144	146	72
XS612 16-6	9.3	1753	683	1070	144	146	77
XS612 17-6	9.3	1799	683	1116	144	146	78
XS612 18-6	9.3	1845	683	1162	144	146	79
XS612 19-6	9.3	1891	683	1208	144	146	80

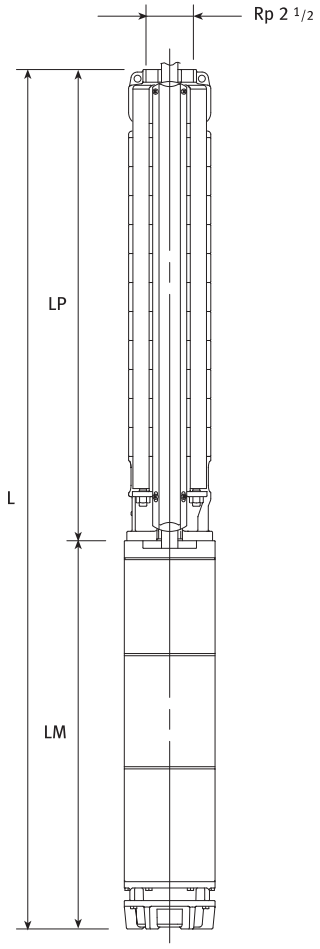

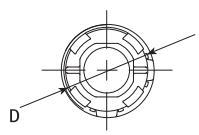

XS612 series from 1 to 19 stages

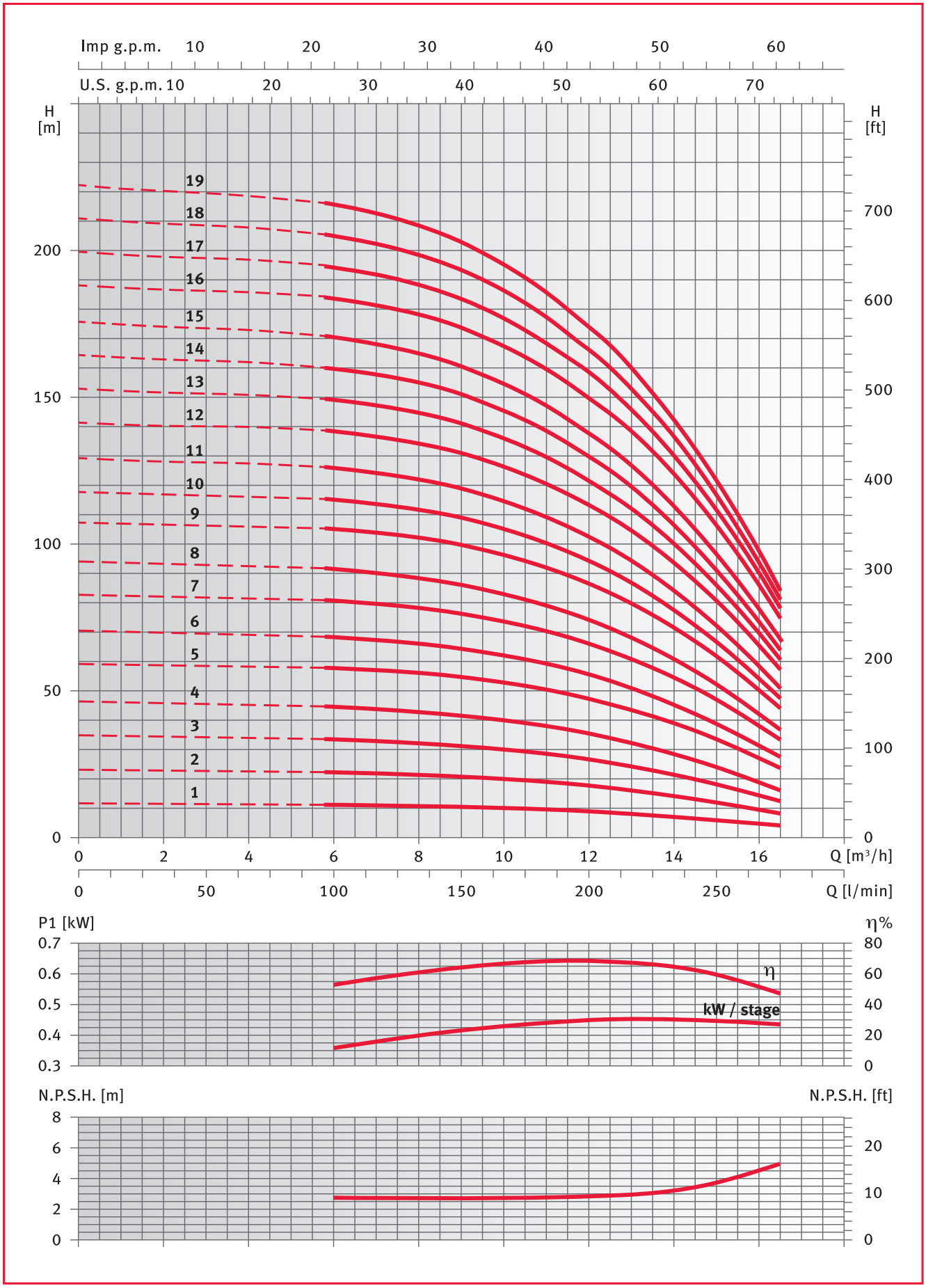

Pump performance valid for liquids with a density of $\rho = 1{,}0$ kg/dm³ and kinematic viscosity of $\upsilon = 1$ mm²/s.

XS612 series from 20 to 39 stages

PUMP	P2	l/min	0	100	150	200	250	275
TYPE	kW	m³/h	0	6	9	12	15	16.5
XS612 20	11		237.2	228.9	216.4	187.5	133.7	95
XS612 21	11		248.7	239.5	226.2	195.5	139	98.4
XS612 22	11		260.2	250.1	235.8	203.5	144.1	101.4
XS612 23	11		271.1	260.5	245.4	211.4	149.2	104.5
XS612 24	13		283.8	274.4	258.8	222.5	155.3	107
XS612 25	13		295.2	285	268.5	230.5	160.3	109.9
XS612 26	13		306.6	295.5	278.1	238.3	165.2	112.7
XS612 27	13		318	306	287.6	246	169.8	115.3
XS612 28	13		329.5	316.4	297.1	253.6	174.5	117.9
XS612 29	15		344.4	334	315.1	272.2	194.1	138.3
XS612 30	15		356	344.7	324.9	280.3	199.3	141.6
XS612 31	15		367.3	355.3	334.6	288.2	204.3	144.7
XS612 32	15		378.9	365.8	344.1	296	209.2	147.5
XS612 33	18.5		389	379.1	357.5	308.1	218.2	154.2
XS612 34	18.5		400.6	389.9	367.4	316.3	223.6	157.6
XS612 35	18.5		412.1	400.5	377.1	324.3	228.6	160.6
XS612 36	18.5		423.3	411.2	386.9	332.2	233.7	163.7
XS612 37	18.5		434.7	421.7	396.4	340	238.7	166.8
XS612 38	18.5		446.2	432.3	406.3	348.2	243.8	169.8
XS612 39	18.5		457.6	442.8	415.7	355.9	248.7	172.7

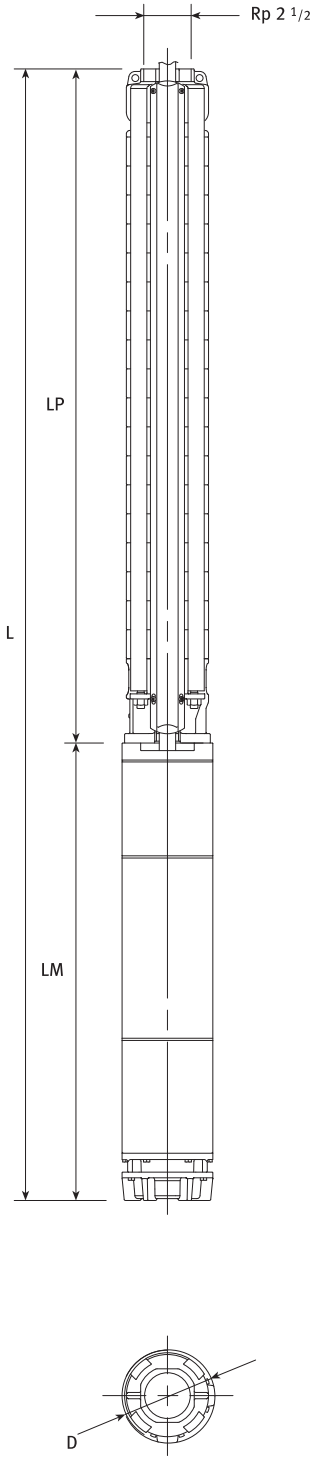

XS612 series dimensions and weights

PUMP	P2	DIMENSIONS (mm)					WEIGHT
TYPE	kW	L	LM	LP	ø D		
					1 cable	2 cables	kg
XS612 20-6	11	1977	723	1254	144	146	86
XS612 21-6	11	2023	723	1300	144	146	87
XS612 22-6	11	2069	723	1346	144	146	88
XS612 23-6	11	2161	723	1438	144	146	90
XS612 24-6	13	2247	763	1484	144	146	95
XS612 25-6	13	2293	763	1530	144	146	96
XS612 26-6	13	2339	763	1576	144	146	98
XS612 27-6	13	2385	763	1622	144	146	99
XS612 28-6	13	2431	763	1668	144	146	100
XS612 29-6	15	2547	833	1714	144	146	109
XS612 30-6	15	2593	833	1760	144	146	110
XS612 31-6	15	2639	833	1806	144	146	112
XS612 32-6	15	2685	833	1852	144	146	113
XS612 33-6	18.5	2801	903	1898	144	146	122
XS612 34-6	18.5	2847	903	1944	144	146	123
XS612 35-6	18.5	2893	903	1990	144	146	124
XS612 36-6	18.5	2985	903	2082	144	146	126
XS612 37-6	18.5	3031	903	2128	144	146	128
XS612 38-6	18.5	3077	903	2174	144	146	129
XS612 39-6	18.5	3123	903	2220	144	146	130

XS612 series from 20 to 39 stages

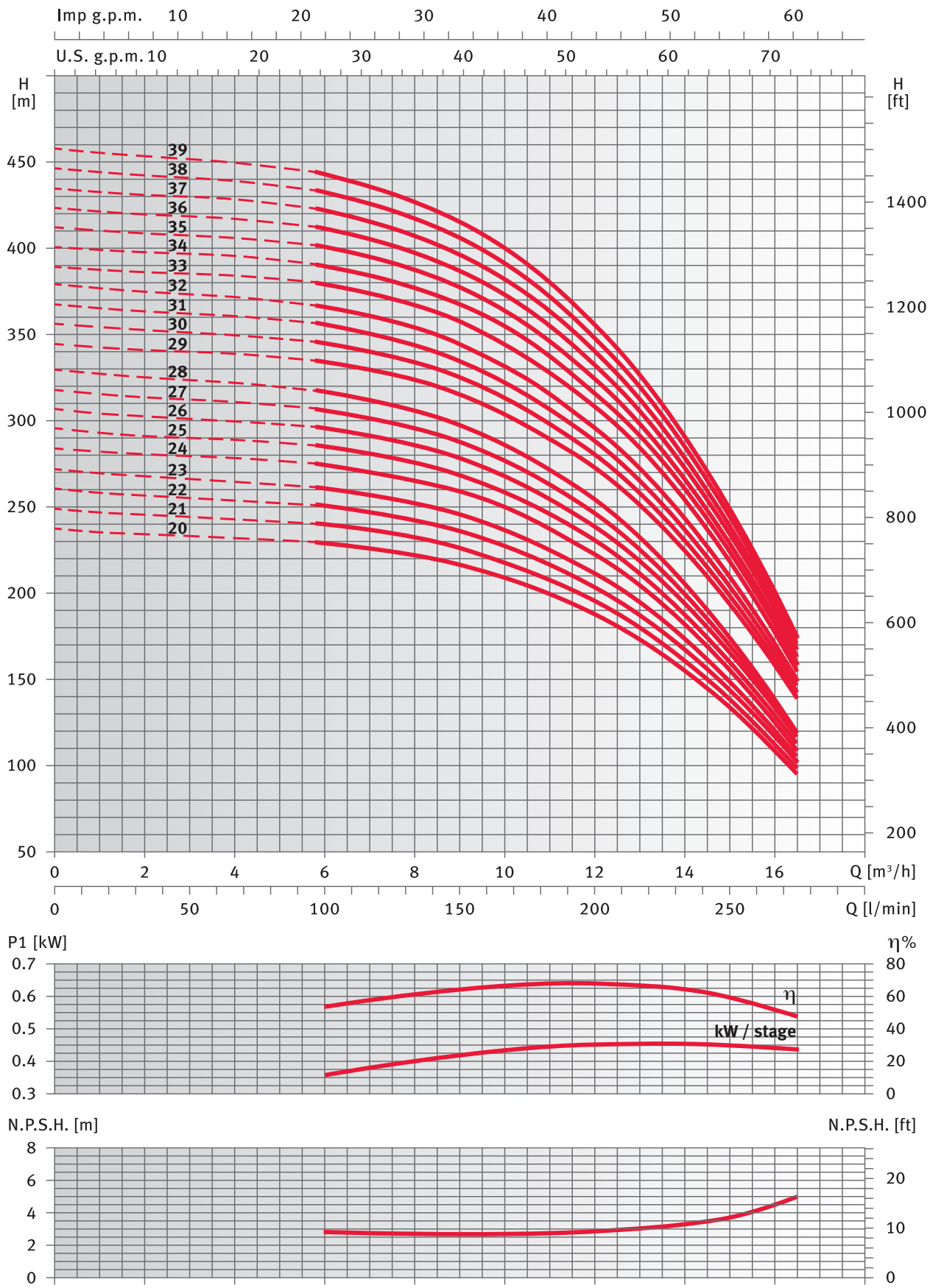

Pump performance valid for liquids with a density of $\rho = 1{,}0$ kg/dm³ and kinematic viscosity of $\upsilon = 1$ mm²/s.

XS612 series from 40 to 60 stages

PUMP	P2	l/min	0	100	150	200	250	275
TYPE	kW	m³/h	0	6	9	12	15	16.5
XS612 40D	18.5		468.7	453.3	425.2	363.5	253.4	175.5
XS612 41D	22		484.7	471.8	444.8	383.3	271.8	192.4
XS612 42D	22		496.1	482.6	454.6	391.4	276.9	195.4
XS612 43D	22		507.6	493.2	464.3	399.2	281.9	198.5
XS612 44D	22		519.1	503.8	474	407.3	287	201.6
XS612 45D	22		530.5	514.4	483.7	415.3	292.2	204.9
XS612 46D	22		541.9	525	493.1	422.8	296.8	207.6
XS612 47D	22		553.3	535.5	502.8	430.7	301.7	210.5
XS612 48D	26		569.6	557.2	526.8	455.9	326.1	233.4
XS612 49D	26		581.1	568.1	536.9	464.4	331.8	237.1
XS612 50D	26		592.7	578.9	546.8	472.6	337.2	240.7
XS612 51D	26		604.1	589.8	556.8	480.9	342.6	244.1
XS612 52D	26		615.9	600.8	566.8	489.1	348	247.6
XS612 53D	26		627.4	611.6	576.8	497.5	353.6	251.1
XS612 54D	26		638.8	622.4	586.6	505.4	358.6	254.3
XS612 55D	26		650.2	633	596.4	513.6	364	257.7
XS612 56D	30		664.2	648.5	612.4	529.1	377.4	269.3
XS612 57D	30		675.7	659.3	622.2	537.2	382.7	272.7
XS612 58D	30		687.5	670.2	632.3	545.5	388.2	276.1
XS612 59D	30		698.9	680.9	642.2	553.8	393.6	279.5
XS612 60D	30		710.2	691.9	652.1	561.9	398.6	282.6

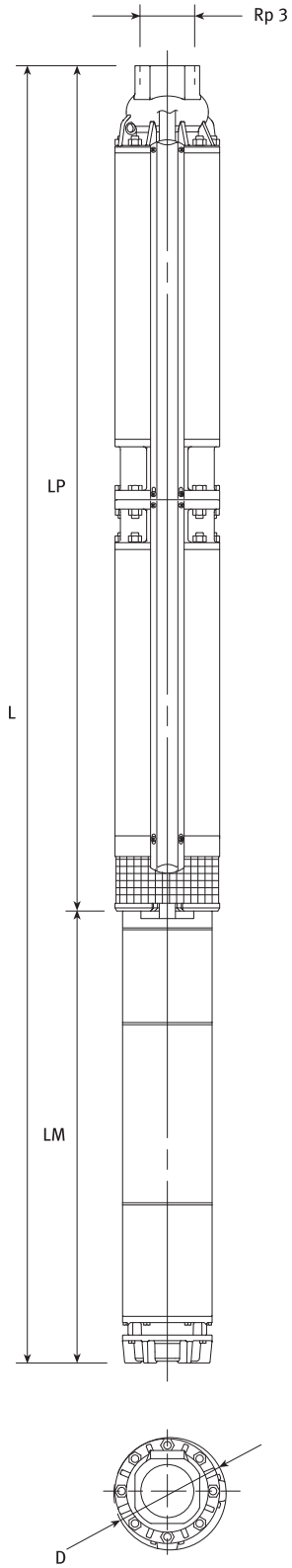

XS612 series dimensions and weights

PUMP	P2	DIMENSIONS (mm)					WEIGHT
TYPE	kW	L	LM	LP	ø D		
					1 cable	2 cables	kg
XS612 40D-6	18.5	3825	903	2922	177	180	188
XS612 41D-6	22	3865	943	2922	177	180	192
XS612 42D-6	22	3865	943	2922	177	180	193
XS612 43D-6	22	3865	943	2922	177	180	193
XS612 44D-6	22	3865	943	2922	177	180	194
XS612 45D-6	22	3865	943	2922	177	180	194
XS612 46D-6	22	3865	943	2922	177	180	195
XS612 47D-6	22	3865	943	2922	177	180	195
XS612 48D-6	26	4407	1071	3336	177	180	217
XS612 49D-6	26	4407	1071	3336	177	180	218
XS612 50D-6	26	4407	1071	3336	177	180	218
XS612 51D-6	26	4407	1071	3336	177	180	219
XS612 52D-6	26	4407	1071	3336	177	180	219
XS612 53D-6	26	4407	1071	3336	177	180	220
XS612 54D-6	26	4407	1071	3336	177	180	221
XS612 55D-6	26	4407	1071	3336	177	180	221
XS612 56D-6	30	4487	1151	3336	177	180	230
XS612 57D-6	30	4625	1151	3474	177	180	234
XS612 58D-6	30	4625	1151	3474	177	180	234
XS612 59D-6	30	4625	1151	3474	177	180	235
XS612 60D-6	30	4763	1151	3612	177	180	239

XS612 series from 40 to 60 stages

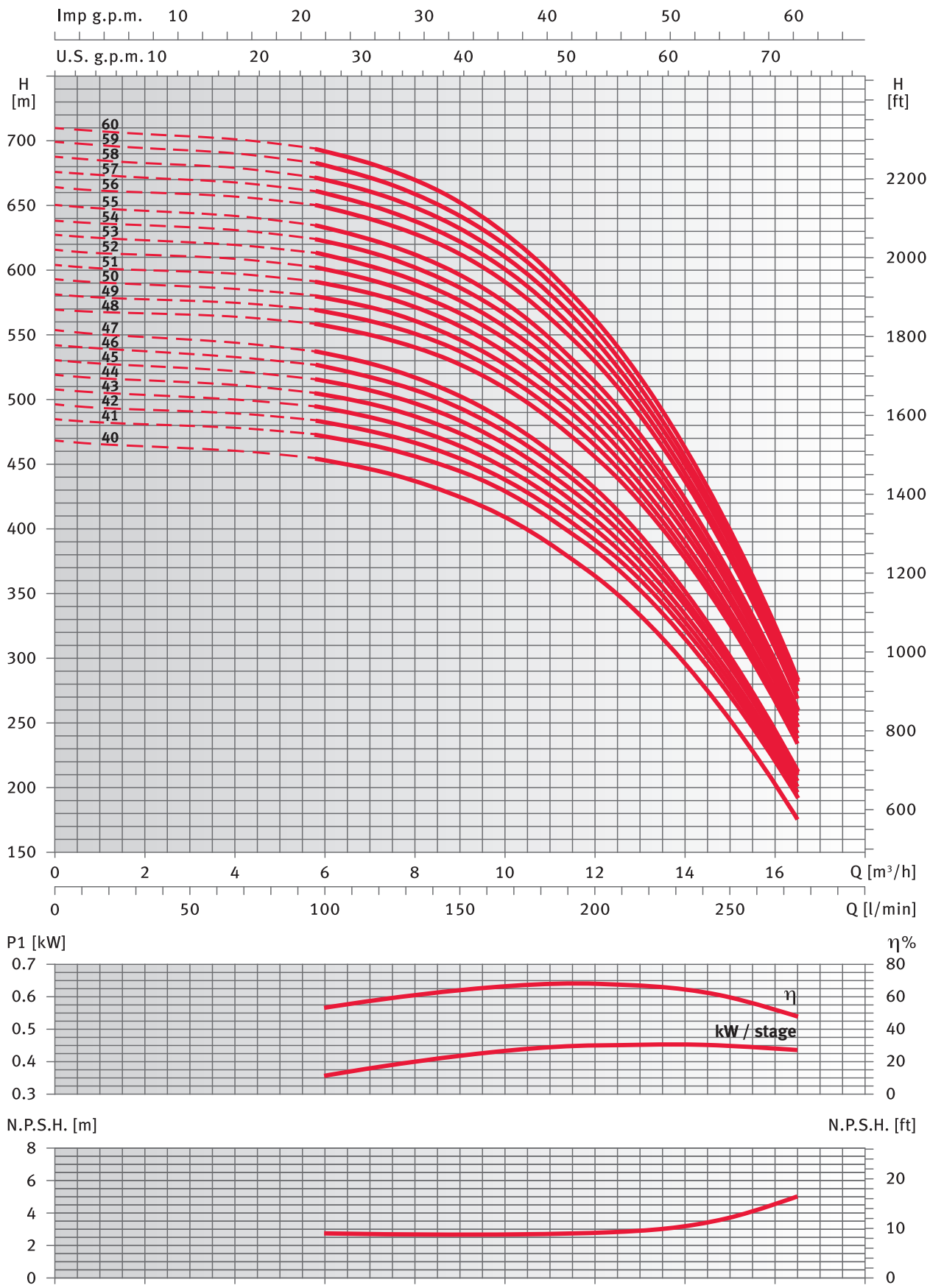

Pump performance valid for liquids with a density of $\rho = 1{,}0$ kg/dm³ and kinematic viscosity of $\upsilon = 1$ mm²/s.

XS616 series from 1 to 18 stages

PUMP	P2	l/min	0	125	200	250	300	366.7
TYPE	kW	m³/h	0	7.5	12	15	18	22
XS616 01	0.75		12.3	12.1	11.6	10.8	9.4	6.5
XS616 02	1.5		24.7	24.1	23.1	21.4	18.6	12.7
XS616 03	2.2		36.9	35.8	34.1	31.5	27.2	18.2
XS616 04	3		49.9	49.5	47.8	44.6	39.3	28.2
XS616 05	4		62.7	62.4	60.3	56.4	49.8	36
XS616 06	5.5		75.7	75.5	73.3	68.7	60.8	44.3
XS616 07	5.5		88.1	87.8	84.9	79.3	69.9	50.7
XS616 08	7.5		100.7	100.6	97.5	91.2	80.6	58.6
XS616 09	7.5		113.3	112.8	109	101.8	89.6	64.9
XS616 10	7.5		126	124.7	120	111.6	97.6	68.7
XS616 11	9.3		139	138.1	133.3	124.3	109.1	77.7
XS616 12	9.3		151.7	150.1	144.9	135.2	118.8	85
XS616 13	11		164.5	163	157.6	147.3	129.8	93.2
XS616 14	11		176.6	175.1	168.9	157.8	139	100.3
XS616 15	11		188.8	186.8	179.9	167.8	147.5	105.5
XS616 16	11		201.1	198.5	190.8	177.6	155.7	110.9
XS616 17	13		214.7	211.9	203.5	188.8	164.9	118
XS616 18	13		227	223.6	214.3	198.5	173	123.5

XS616 series dimensions and weights

PUMP	P2	DIMENSIONS (mm)					WEIGHT
TYPE	kW	L	LM	LP	ø D		
					1 cable	2 cables	kg
XS616 01-4	0.75	646	266	380	142	144	17
XS616 02-4	1.5	774	348	426	142	144	22
XS616 03-4	2.2	865	393	472	142	144	24
XS616 04-4	3	1062	544	518	142	144	33
XS616 05-4	4	1178	614	564	142	144	37
XS616 06-4	5.5	1294	684	610	142	144	42
XS616 07-4	5.5	1340	684	656	142	144	43
XS616 08-4	7.5	1466	764	702	142	144	46
XS616 09-4	7.5	1512	764	748	142	144	48
XS616 10-4	7.5	1558	764	794	142	144	49
XS616 05-6	4	1147	583	564	144	146	52
XS616 06-6	5.5	1223	613	610	144	146	57
XS616 07-6	5.5	1269	613	656	144	146	58
XS616 08-6	7.5	1355	653	702	144	146	63
XS616 09-6	7.5	1401	653	748	144	146	65
XS616 10-6	7.5	1447	653	794	144	146	66
XS616 11-6	9.3	1523	683	840	144	146	71
XS616 12-6	9.3	1569	683	886	144	146	72
XS616 13-6	11	1655	723	932	144	146	77
XS616 14-6	11	1701	723	978	144	146	78
XS616 15-6	11	1747	723	1024	144	146	80
XS616 16-6	11	1793	723	1070	144	146	81
XS616 17-6	13	1879	763	1116	144	146	86
XS616 18-6	13	1925	763	1162	144	146	87

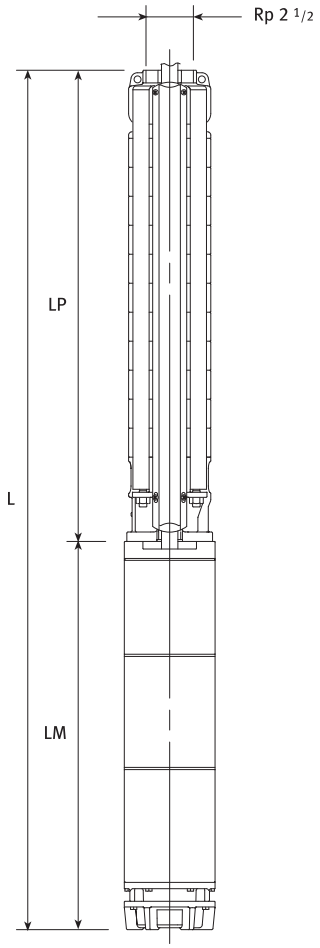

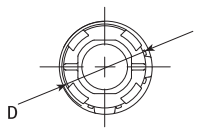

XS616 series from 1 to 18 stages

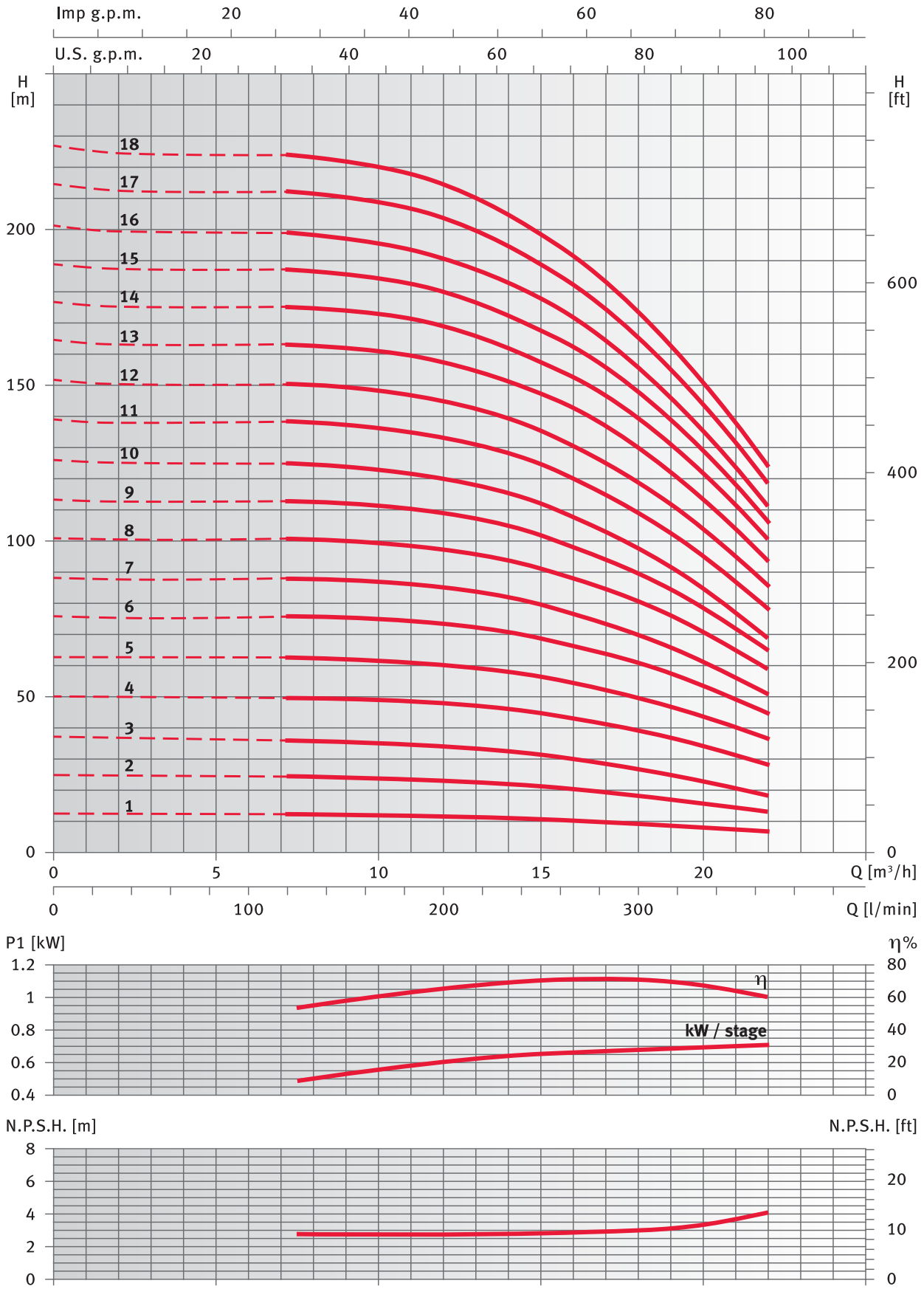

Pump performance valid for liquids with a density of $\rho = 1{,}0$ kg/dm³ and kinematic viscosity of $\upsilon = 1$ mm²/s.

XS616 series from 19 to 36 stages

PUMP	P2	l/min	0	125	200	250	300	366.7
TYPE	kW	m³/h	0	7.5	12	15	18	22
XS616 19	15		240.1	237.5	228.4	212.2	185.6	133.4
XS616 20	15		250.7	248.1	238.6	221.8	194.1	137.1
XS616 21	15		262.9	259.7	249.4	231.7	202.3	142.1
XS616 22	18.5		276.4	274.6	264.9	247	216.9	154.4
XS616 23	18.5		288.5	286.4	276	257.1	225.5	160.1
XS616 24	18.5		300.9	298.2	287	267.1	233.9	165.5
XS616 25	18.5		313	310	298	277	242.2	171.2
XS616 26	18.5		325.3	321.5	308.8	286.8	250.5	176
XS616 27	22		340.3	337.9	325.8	303.9	267	190.3
XS616 28	22		352.7	349.7	337	314	275.5	195.8
XS616 29	22		364.8	361.6	348.1	324.1	284.1	201.6
XS616 30	22		377.1	373.2	358.9	333.9	292.4	206.7
XS616 31	26		391.8	391	378.3	353.9	312.1	225.1
XS616 32	26		404.2	403	389.7	364.3	321	230.9
XS616 33	26		416.8	415.1	401.1	374.8	330	237
XS616 34	26		429.1	427.1	412.5	385	338.6	242.9
XS616 35	26		441.4	439	423.7	395.3	347.5	248.6
XS616 36	26		453.8	450.9	434.9	405.5	356.1	254

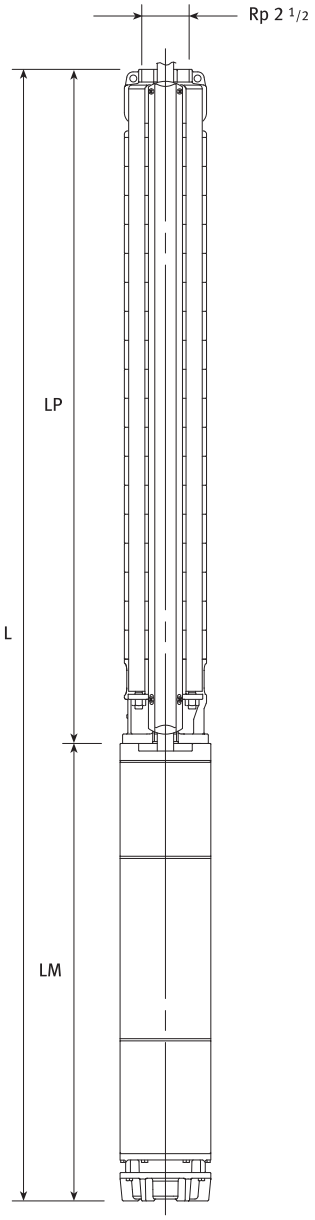

XS616 series dimensions and weights

PUMP	P2	DIMENSIONS (mm)					WEIGHT
TYPE	kW	L	LM	LP	ø D		
					1 cable	2 cables	kg
XS616 19-6	15	2041	833	1208	144	146	96
XS616 20-6	15	2087	833	1254	144	146	98
XS616 21-6	15	2133	833	1300	144	146	99
XS616 22-6	18.5	2249	903	1346	144	146	108
XS616 23-6	18.5	2341	903	1438	144	146	110
XS616 24-6	18.5	2387	903	1484	144	146	111
XS616 25-6	18.5	2433	903	1530	144	146	112
XS616 26-6	18.5	2479	903	1576	144	146	114
XS616 27-6	22	2565	943	1622	144	146	118
XS616 28-6	22	2611	943	1668	144	146	119
XS616 29-6	22	2657	943	1714	144	146	120
XS616 30-6	22	2703	943	1760	144	146	121
XS616 31-6	26	2877	1071	1806	144	146	132
XS616 32-6	26	2923	1071	1852	144	146	133
XS616 33-6	26	2969	1071	1898	144	146	134
XS616 34-6	26	3015	1071	1944	144	146	135
XS616 35-6	26	3061	1071	1990	144	146	136
XS616 36-6	26	3153	1071	2082	144	146	138

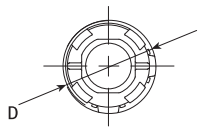

XS616 series from 19 to 36 stages

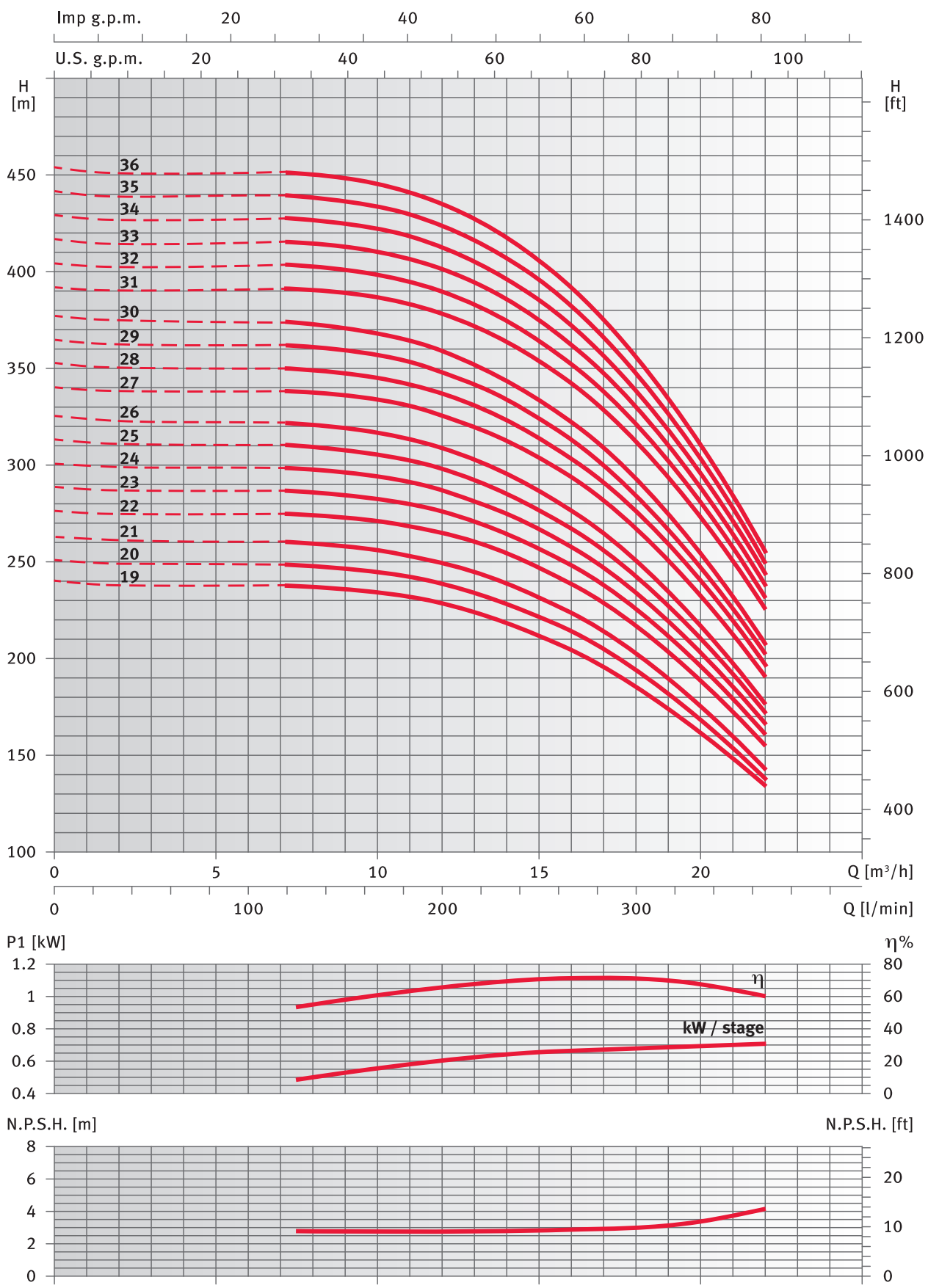

Pump performance valid for liquids with a density of $\rho = 1{,}0$ kg/dm³ and kinematic viscosity of $\upsilon = 1$ mm²/s.

XS616 series from 37 to 56 stages

PUMP	P2	l/min	0	125	200	250	300	366.7
TYPE	kW	m³/h	0	7.5	12	15	18	22
XS616 37D	30		467.3	465.4	449.6	420	369.7	265.2
XS616 38D	30		479.6	477.4	460.9	430.2	378.5	271.1
XS616 39D	30		492.2	489.4	472.1	440.3	387	277.3
XS616 40D	30		504.5	501.2	483.2	450.5	395.6	282.2
XS616 41D	30		516.8	513.1	494.3	460.6	404.2	287.9
XS616 42D	30		529.1	524.8	505.4	470.7	412.8	293.2
XS616 43D	37		543.1	541.4	523.4	488.9	430.6	310.5
XS616 44D	37		555.4	553.6+	534.7	499.3	439.4	315.6
XS616 45D	37		568	565.3	545.9	509.6	448.3	321.1
XS616 46D	37		580.2	577.4	557.2	519.9	456.9	326.3
XS616 47D	37		592.4	589.3	568.3	529.8	465.3	332.1
XS616 48D	37		605	601.1	579.5	540.1	473.9	337.3
XS616 49D	37		617.2	613.1	590.6	550	482.2	342.9
XS616 50D	37		629.4	624.8	601.4	559.8	490.4	348.3
XS616 51D	37		641.9	636.6	612.6	569.8	498.8	353.4
XS616 52D	37		654.2	648.3	623.2	579.5	507	358.3
XS616 53D	45		669.3	665.5	642.3	599.5	527.3	377.7
XS616 54D	45		681.6	677.3	653.4	609.8	536.3	382.-9
XS616 55D	45		693.9	689.4	664.6	620	544.9	389.3
XS616 56D	45		706.4	701.3	676	630.1	553.4	395.6

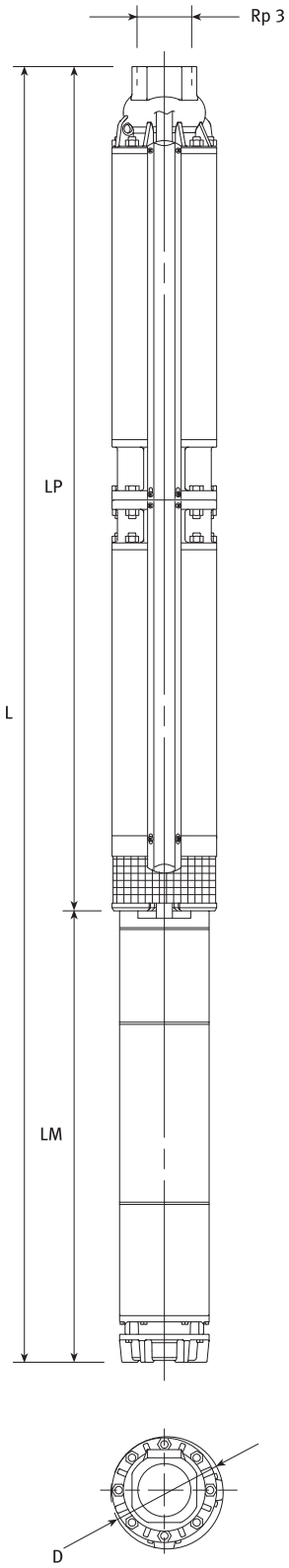

XS616 series dimensions and weights

PUMP	P2	DIMENSIONS (mm)					WEIGHT
TYPE	kW	L	LM	LP	ø D		
					1 cable	2 cables	kg
XS616 37D-6	30	3659	1151	2508	177	180	197
XS616 38D-6	30	3659	1151	2508	177	180	197
XS616 39D-6	30	4073	1151	2922	177	180	208
XS616 40D-6	30	4073	1151	2922	177	180	208
XS616 41D-6	30	4073	1151	2922	177	180	209
XS616 42D-6	30	4073	1151	2922	177	180	210
XS616 43D-6	37	4223	1301	2922	177	180	224
XS616 44D-6	37	4223	1301	2922	177	180	225
XS616 45D-6	37	4223	1301	2922	177	180	225
XS616 46D-6	37	4223	1301	2922	177	180	226
XS616 47D-6	37	4223	1301	2922	177	180	226
XS616 48D-6	37	4637	1301	3336	177	180	239
XS616 49D-6	37	4637	1301	3336	177	180	240
XS616 50D-6	37	4637	1301	3336	177	180	240
XS616 51D-6	37	4637	1301	3336	177	180	241
XS616 52D-6	37	4637	1301	3336	177	180	241
XS616 53D-8	45	4580	1195	3385	193	195	316
XS616 54D-8	45	4580	1195	3385	193	195	317
XS616 55D-8	45	4580	1195	3385	193	195	318
XS616 56D-8	45	4580	1195	3385	193	195	318

XS616 series from 37 to 56 stages

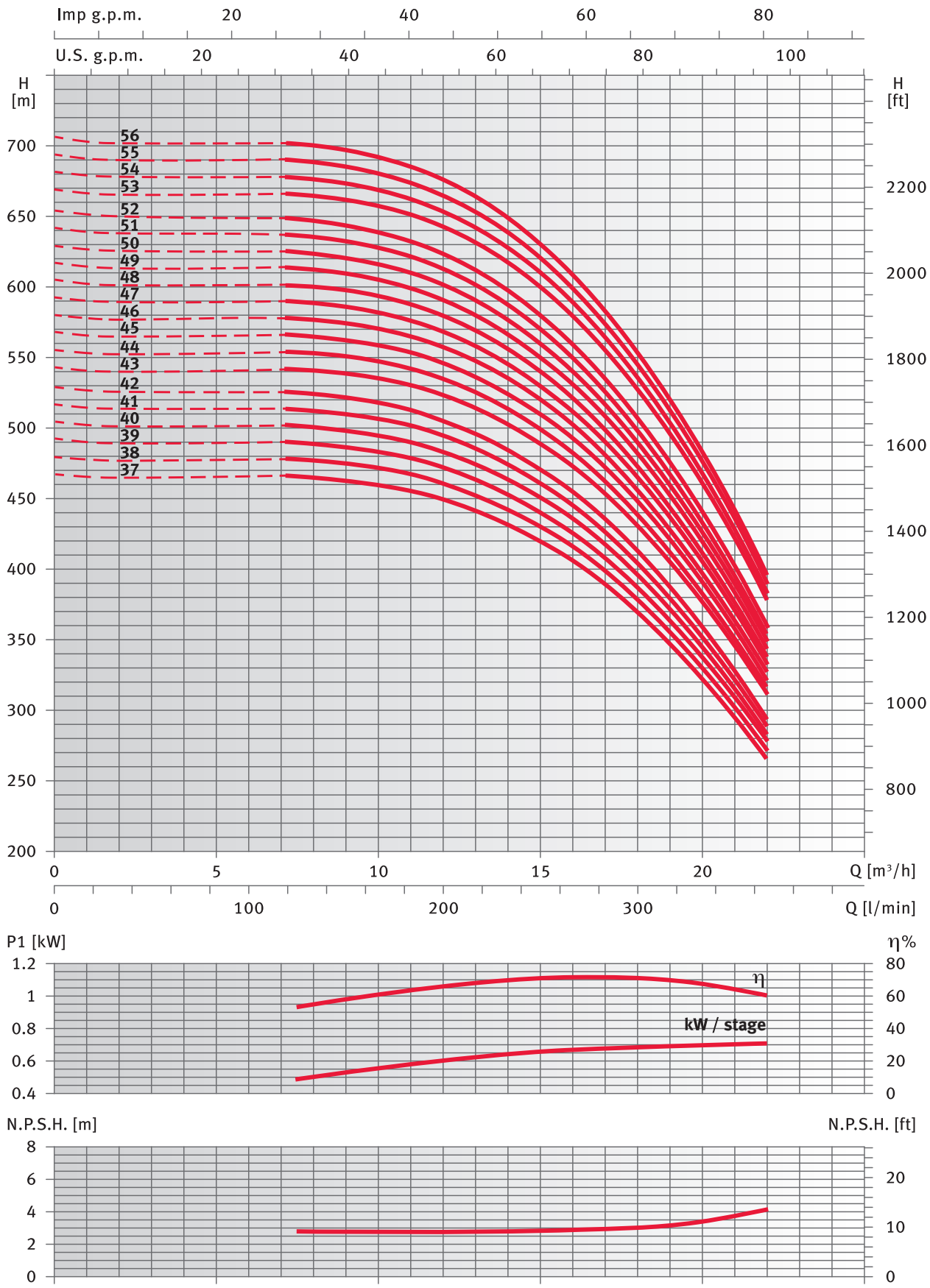

Pump performance valid for liquids with a density of $\rho = 1{,}0$ kg/dm³ and kinematic viscosity of $\upsilon = 1$ mm²/s.

XS622 series from 1 to 17 stages

PUMP TYPE	P2 kW	l/min m³/h	0 0	150 9	200 12	300 18	400 24	500 30
XS622 01	1.1		13.8	12.8	12.4	11.2	9.2	5.9
XS622 02	2.2		27.7	25.5	24.8	22.5	18.4	11.7
XS622 03	3		42.8	40.3	39.3	36.3	30.5	20.6
XS622 04	4		57.6	54.2	53	48.8	41	27.8
XS622 05	5.5		72.4	68.3	66.8	61.8	52.2	35.9
XS622 06	7.5		86.5	82	80.2	74.2	62.6	42.9
XS622 07	7.5		100.1	94.7	92.6	85.3	71.6	48.3
XS622 08	9.3		111.6	107.5	105.1	96.7	80.9	54.8
XS622 09	9.3		124.8	120	117.2	107.4	89.4	60
XS622 10	11		143.6	135.5	132.4	122.2	102.6	69
XS622 11	11		157	148	144.6	133	111.2	74
XS622 12	13		172.1	162.4	158.6	146.3	122.7	82.3
XS622 13	13		184.3	173.6	169.4	155.6	129.6	85.5
XS622 14	15		201	190.1	185.8	171.7	144.6	97.9
XS622 15	15		214.4	202.7	198.1	182.7	153.3	103.1
XS622 16	18.5		225.9	213.9	209.3	193.5	162.7	109.6
XS622 17	18.5		239.3	226.5	221.4	204.3	171.4	114.8

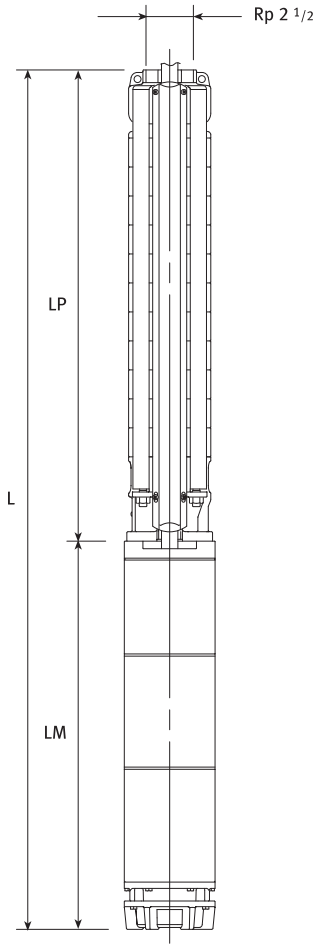

XS622 series dimensions and weights

PUMP TYPE	P2 kW	DIMENSIONS (mm) L	LM	LP	ø D 1 cable	2 cables	WEIGHT kg
XS622 01-4	1.1	643	286	357	142	144	17
XS622 02-4	2.2	819	393	426	142	144	23
XS622 03-4	3	1039	544	495	142	144	32
XS622 04-4	4	1178	614	564	142	144	38
XS622 05-4	5.5	1317	684	633	142	144	42
XS622 06-4	7.5	1466	764	702	142	144	46
XS622 07-4	7.5	1535	764	771	142	144	47
XS622 04-6	4	1147	583	564	144	146	52
XS622 05-6	5.5	1246	613	633	144	146	57
XS622 06-6	7.5	1355	653	702	144	146	63
XS622 07-6	7.5	1424	653	771	144	146	64
XS622 08-6	9.3	1523	683	840	144	146	70
XS622 09-6	9.3	1592	683	909	144	146	71
XS622 10-6	11	1701	723	978	144	146	77
XS622 11-6	11	1770	723	1047	144	146	78
XS622 12-6	13	1879	763	1116	144	146	84
XS622 13-6	13	1948	763	1185	144	146	85
XS622 14-6	15	2087	833	1254	144	146	95
XS622 15-6	15	2156	833	1323	144	146	97
XS622 16-6	18.5	2295	903	1392	144	146	106
XS622 17-6	18.5	2364	903	1461	144	146	108

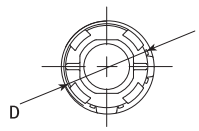

XS622 series from 1 to 17 stages

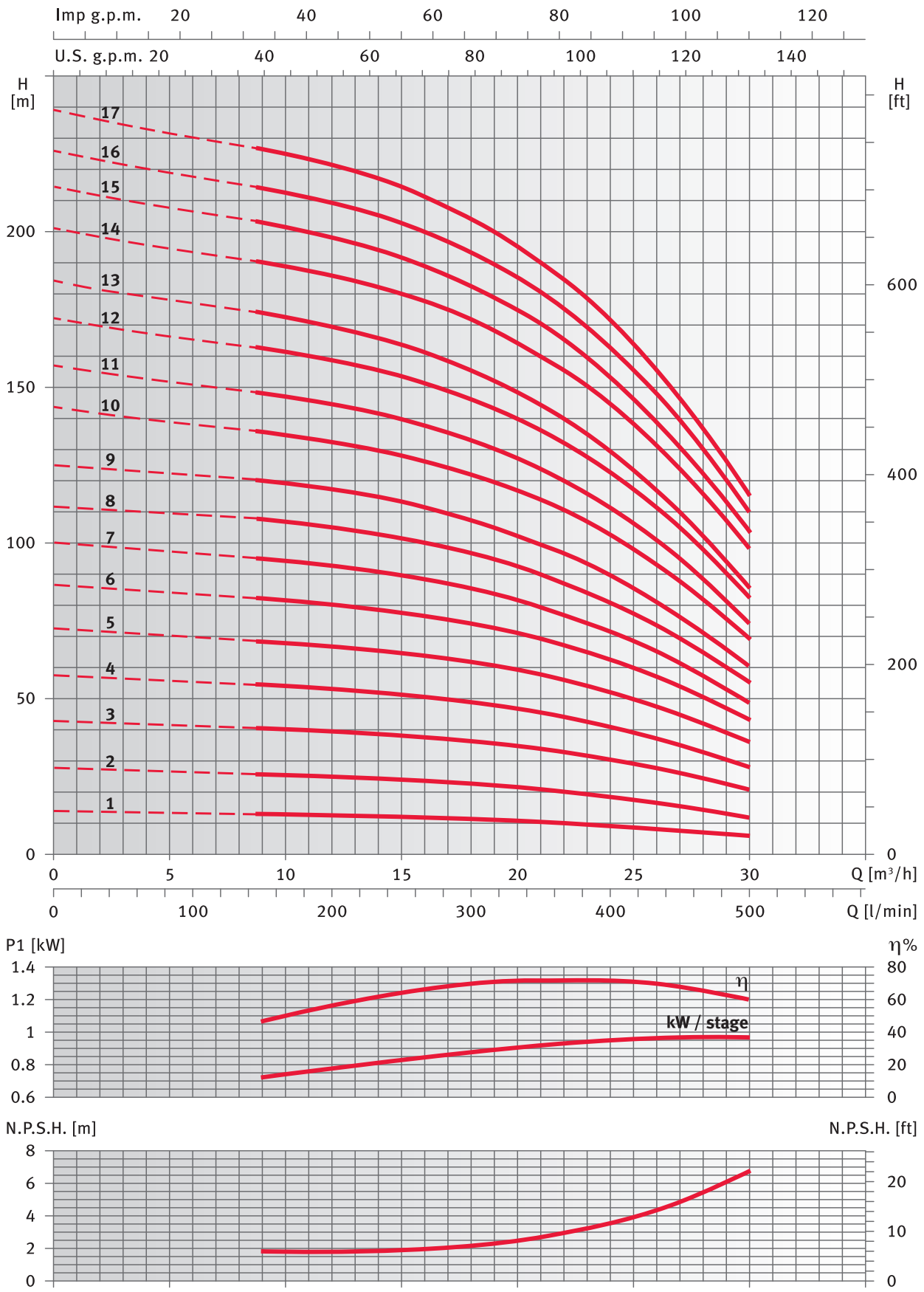

Pump performance valid for liquids with a density of $\rho = 1{,}0$ kg/dm³ and kinematic viscosity of $\upsilon = 1$ mm²/s.

XS622 series from 18 to 33 stages

PUMP	P2	l/min	0	150	200	300	400	500
TYPE	kW	m³/h	0	9	12	18	24	30
XS622 18	18.5		252.5	238.8	233.4	215	179.9	119.8
XS622 19	22		271.9	257	251.1	231.5	194.8	132.7
XS622 20	22		285.4	269.7	263.3	242.5	203.7	138
XS622 21	22		298.8	282.3	275.6	253.4	212.3	143.2
XS622 22	22		312.2	294.8	287.6	264.1	220.8	148.2
XS622 23	26		331	313.1	306.1	282.8	238.8	163.9
XS622 24	26		344.7	326	318.5	294	247.9	169.7
XS622 25	26		358.3	338.8	330.9	305.1	256.8	175.2
XS622 26	26		371.8	351.5	343.3	316.1	265.6	180.5
XS622 27	30		387.8	367.1	359.5	333.1	281.2	190.5
XS622 28	30		401.4	379.9	371.8	344.2	290.1	196
XS622 29	30		415	392.7	384.2	355.3	299	201.4
XS622 30	30		428.5	405.3	396.5	366.4	307.9	206.6
XS622 31	37		443.9	421.8	413.2	383.1	323.7	220.1
XS622 32	37		457.6	434.7	425.7	394.4	332.7	225.7
XS622 33	37		471.2	447.5	438.1	405.5	341.6	231

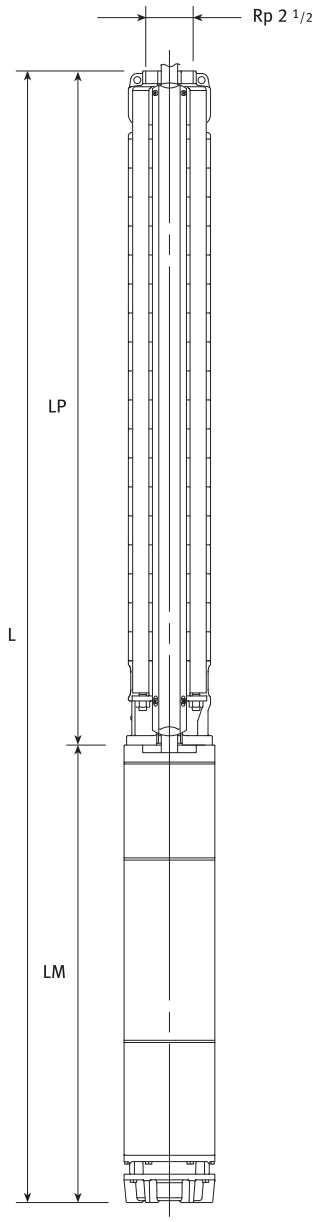

XS622 series dimensions and weights

PUMP	P2	DIMENSIONS (mm)					WEIGHT
TYPE	kW	L	LM	LP	ø D		
					1 cable	2 cables	kg
XS622 18-6	18.5	2433	903	1530	144	146	109
XS622 19-6	22	2542	943	1599	144	146	114
XS622 20-6	22	2611	943	1668	144	146	116
XS622 21-6	22	2680	943	1737	144	146	117
XS622 22-6	22	2749	943	1806	144	146	119
XS622 23-6	26	2946	1071	1875	144	146	129
XS622 24-6	26	3015	1071	1944	144	146	131
XS622 25-6	26	3084	1071	2013	144	146	133
XS622 26-6	26	3153	1071	2082	144	146	134
XS622 27-6	30	3302	1151	2151	144	146	144
XS622 28-6	30	3371	1151	2220	144	146	145
XS622 29-6	30	3440	1151	2289	144	146	147
XS622 30-6	30	3509	1151	2358	144	146	148
XS622 31-6	37	3728	1301	2427	144	146	164
XS622 32-6	37	3797	1301	2493	144	146	165
XS622 33-6	37	3866	1301	2565	144	146	167

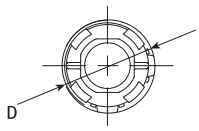

XS622 series from 18 to 33 stages

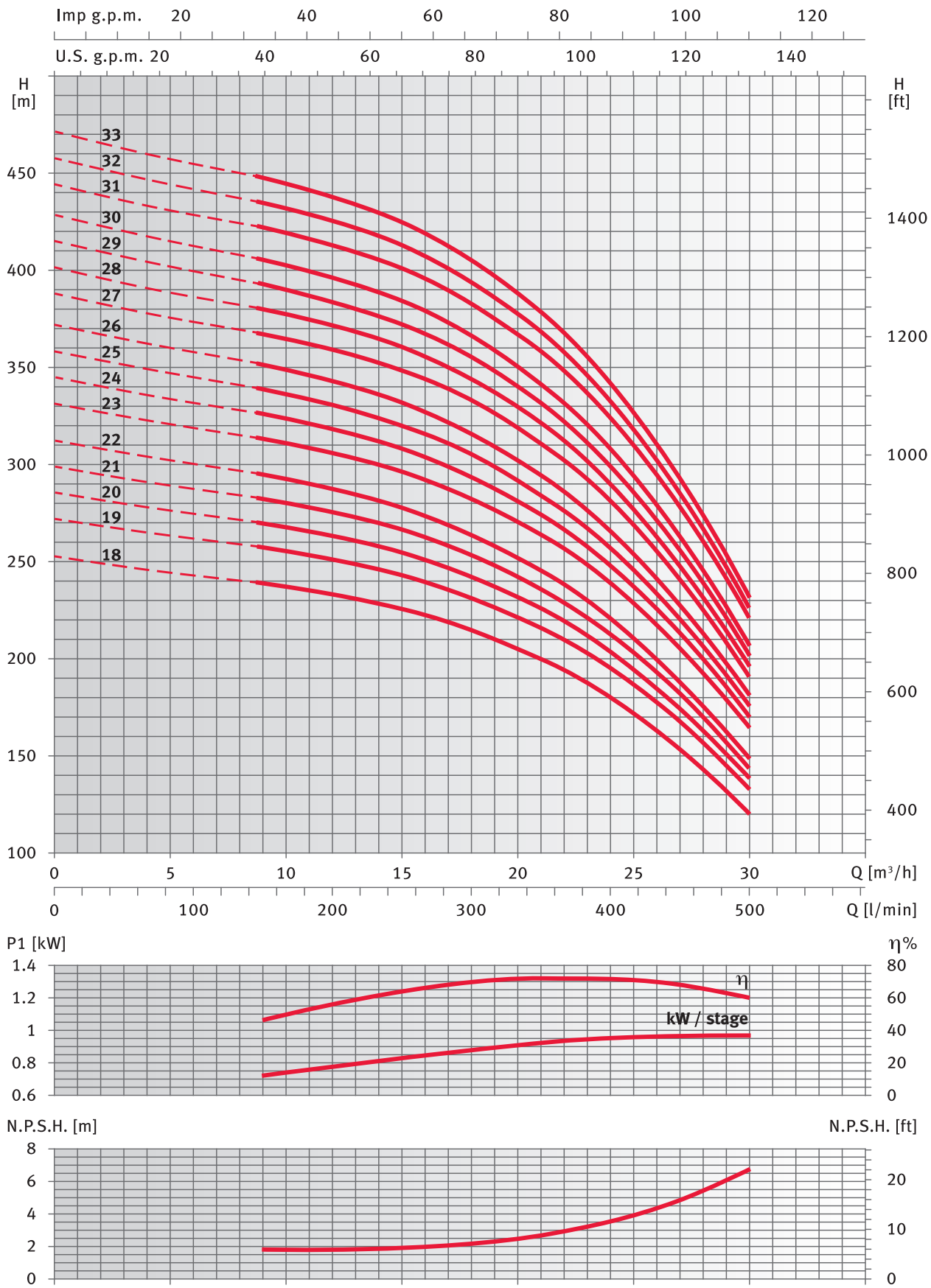

Pump performance valid for liquids with a density of $\rho = 1{,}0$ kg/dm³ and kinematic viscosity of $\upsilon = 1$ mm²/s.

XS622 series from 34 to 50 stages

PUMP	P2	l/min	0	150	200	300	400	500
TYPE	kW	m³/h	0	9	12	18	24	30
XS622 34D	37		484.7	460.1	450.3	416.6	350.5	236.4
XS622 35D	37		498.3	472.9	462.7	427.5	359.1	241.4
XS622 36D	37		511.8	485.5	474.9	438.4	367.8	246.5
XS622 37D	37		525.2	498.1	487	449.1	376.1	251.2
XS622 38D	45		543	515.3	504.6	467.5	394.4	267.3
XS622 39D	45		556.5	528.1	517	478.7	403.5	272.9
XS622 40D	45		570	540.8	529.4	489.9	412.5	278.1
XS622 41D	45		583.5	553.4	541.6	500.9	421.2	283.3
XS622 42D	45		596.9	566	553.9	512	430.1	288.7
XS622 43D	45		610.3	578.5	566	522.9	439	294
XS622 44D	45		623.9	591.1	578.1	533.8	447.7	299.1
XS622 45D	45		637.2	603.6	590.3	544.6	456.3	304.1
XS622 46D	52		656.3	622.9	609.8	564.4	475.5	321.1
XS622 47D	52		669.7	635.5	622.1	575.5	484.3	326.4
XS622 48D	52		683.5	648.4	634.5	586.5	493	331.5
XS622 49D	52		696.6	661.1	646.8	597.4	501.6	336.7
XS622 50D	52		710.2	673.6	658.9	608.3	510.4	341.8

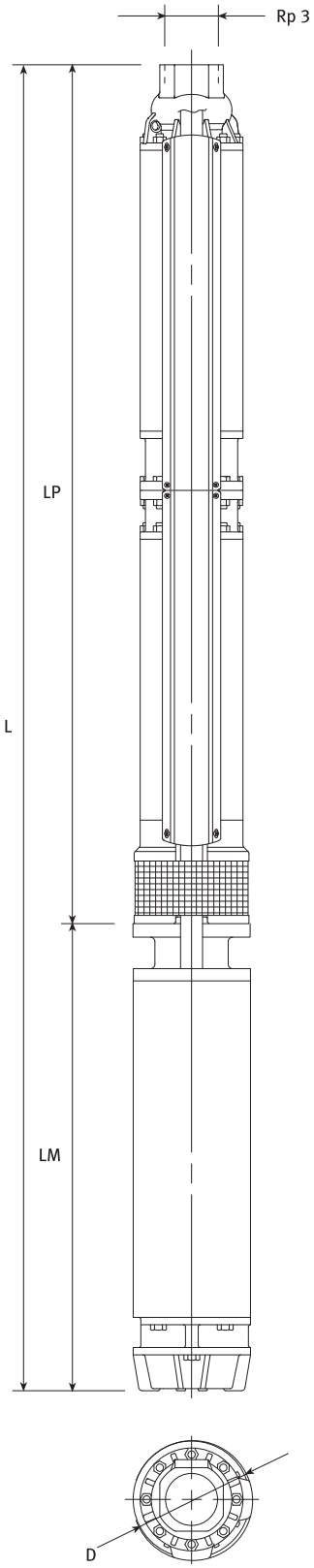

XS622 series dimensions and weights

PUMP	P2	DIMENSIONS (mm)					WEIGHT
TYPE	kW	L	LM	LP	ø D		
					1 cable	2 cables	kg
XS622 34D-6	37	4223	1301	2922	177	180	221
XS622 35D-6	37	4637	1301	3336	177	180	233
XS622 36D-6	37	4637	1301	3336	177	180	234
XS622 37D-6	37	4637	1301	3336	177	180	235
XS622 38D-8	45	4580	1195	3385	193	195	310
XS622 39D-8	45	4580	1195	3385	193	195	311
XS622 40D-8	45	4580	1195	3385	193	195	311
XS622 41D-8	45	4718	1195	3523	193	195	315
XS622 42D-8	45	4718	1195	3523	193	195	316
XS622 43D-8	45	4856	1195	3661	193	195	321
XS622 44D-8	45	4856	1195	3661	193	195	321
XS622 45D-8	45	5063	1195	3868	193	195	327
XS622 46D-8	52	5153	1285	3868	193	195	348
XS622 47D-8	52	5153	1285	3868	193	195	348
XS622 48D-8	52	5360	1285	4075	193	195	355
XS622 49D-8	52	5360	1285	4075	193	195	356
XS622 50D-8	52	5360	1285	4075	193	195	357

XS622 series from 34 to 50 stages

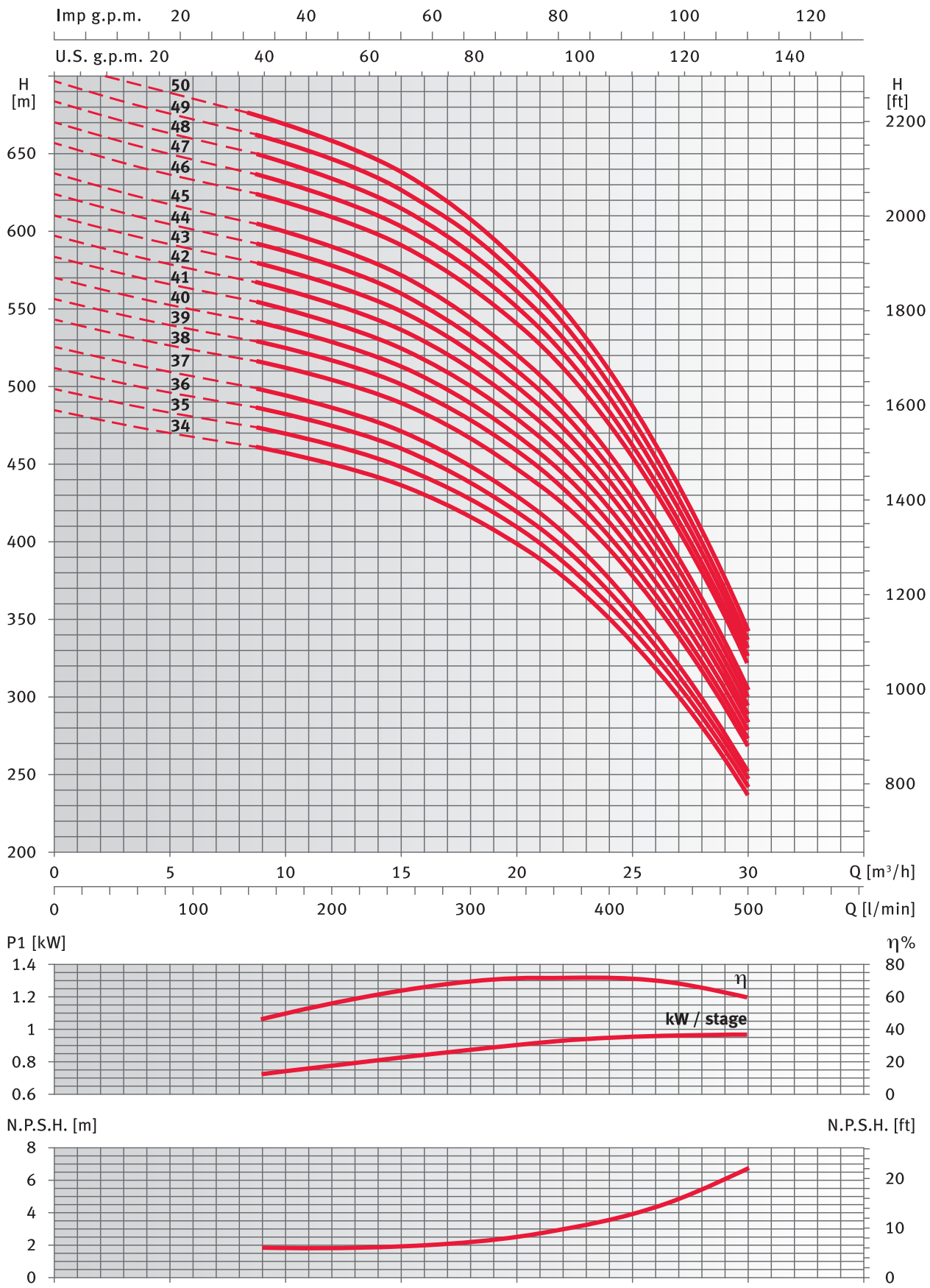

Pump performance valid for liquids with a density of $\rho = 1{,}0$ kg/dm³ and kinematic viscosity of $\upsilon = 1$ mm²/s.

XS631 series from 1 to 15 stages

PUMP	P2	l/min	0	200	400	500	600	666.7
TYPE	kW	m³/h	0	12	24	30	36	40
XS631 01	1.5		15.6	14.3	12.3	10.7	8.5	6.6
XS631 02	3		31.7	29.3	25.4	22.2	17.8	14.1
XS631 03	4		47.4	43.8	37.9	33.1	26.4	20.7
XS631 04	5.5		63.1	58.8	51.3	45.1	36.5	29.2
XS631 05	7.5		78.7	73.4	64	56.2	45.4	36.3
XS631 06	7.5		93.9	87.2	75.9	66.6	53.7	42.9
XS631 07	9.3		109.2	102.7	89.9	79.1	64.2	51.5
XS631 08	11		124.7	117.3	102.9	90.6	73.5	59.1
XS631 09	11		139.8	130.8	114	100	80.9	64.7
XS631 10	13		155.7	145.9	127.5	112	90.9	73
XS631 11	15		171.8	161.1	141.2	124.4	101.2	81.6
XS631 12	18.5		188.1	177.5	156.4	138.3	113.2	91.9
XS631 13	18.5		203	191.4	168.2	148.4	121.1	97.9
XS631 14	18.5		218	205.2	179.8	158.3	128.7	103.6
XS631 15	22		233.6	219.3	192.3	169.5	138.1	111.4

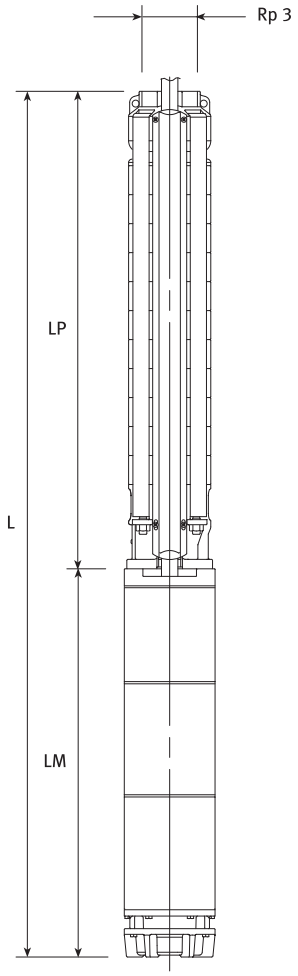

XS631 series dimensions and weights

PUMP	P2	DIMENSIONS (mm)					WEIGHT
TYPE	kW	L	LM	LP	ø D		
					1 cable	2 cables	kg
XS631 01-4	1.5	715	348	367	142	144	21
XS631 02-4	3	980	544	436	142	144	31
XS631 03-4	4	1119	614	505	142	144	35
XS631 04-4	5.5	1258	684	574	142	144	40
XS631 05-4	7.5	1407	764	643	142	144	44
XS631 06-4	7.5	1475	764	712	142	144	46
XS631 03-6	4	1088	583	505	144	146	50
XS631 04-6	5.5	1187	613	574	144	146	56
XS631 05-6	7.5	1296	653	643	144	146	61
XS631 06-6	7.5	1365	653	712	144	146	63
XS631 07-6	9.3	1464	683	781	144	146	67
XS631 08-6	11	1573	723	850	144	146	74
XS631 09-6	11	1642	723	919	144	146	75
XS631 10-6	13	1751	763	988	144	146	81
XS631 11-6	15	1890	833	1057	144	146	90
XS631 12-6	18.5	2029	903	1126	144	146	100
XS631 13-6	18.5	2098	903	1195	144	146	101
XS631 14-6	18.5	2167	903	1264	144	146	103
XS631 15-6	22	2276	943	1333	144	146	108

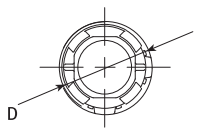

XS631 series from 1 to 15 stages

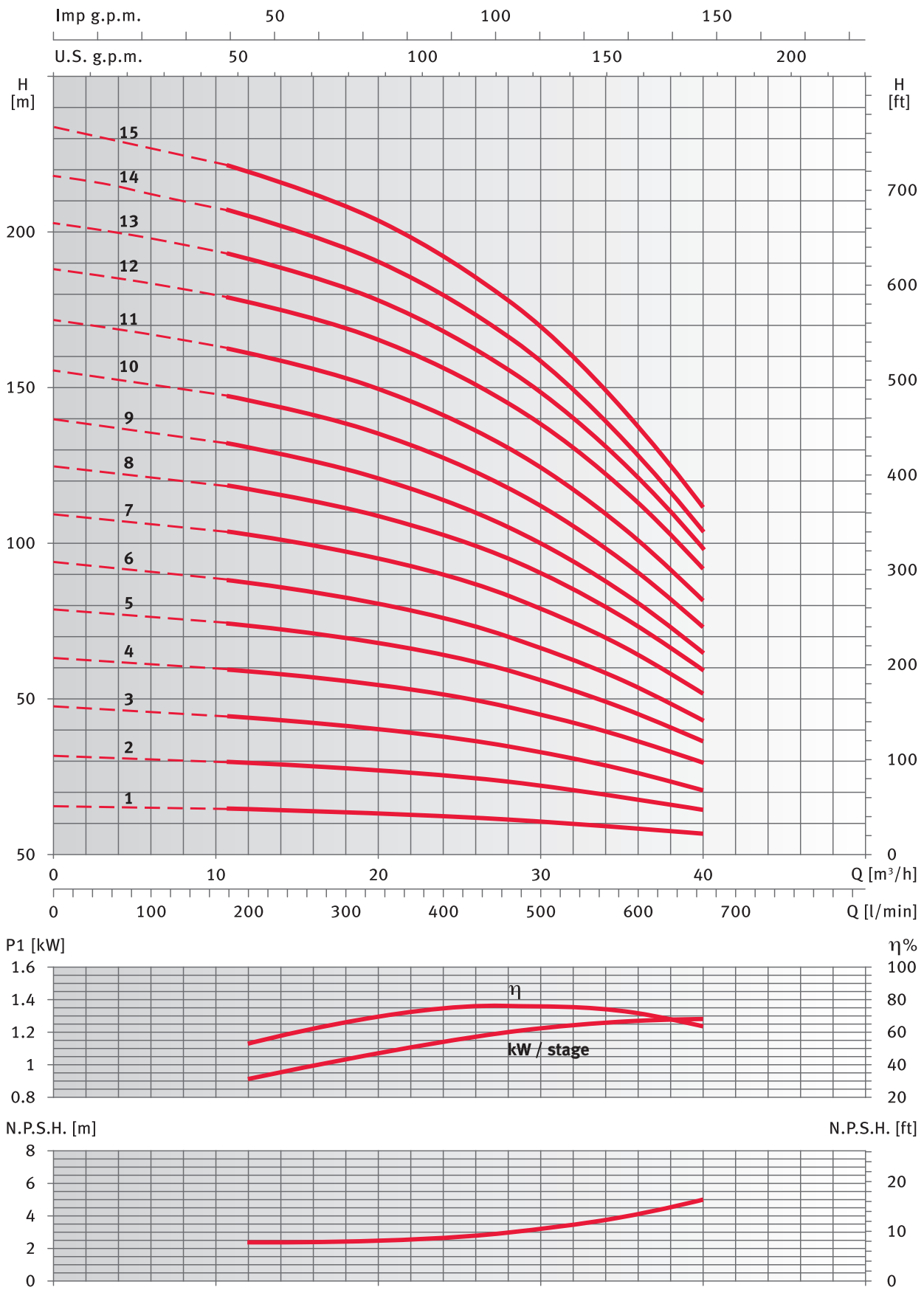

Pump performance valid for liquids with a density of $\rho = 1{,}0$ kg/dm³ and kinematic viscosity of $\upsilon = 1$ mm²/s.

XS631 series from 16 to 29 stages

PUMP	P2	l/min	0	200	400	500	600	666.7
TYPE	kW	m³/h	0	12	24	30	36	40
XS631 16	22		248.5	233	203.9	179.4	145.7	117.2
XS631 17	22		262.4	246.9	215.9	189.7	153.7	123.2
XS631 18	26		280.6	265.1	233.8	206.7	169.1	137.1
XS631 19	26		295.5	279.2	245.7	217	177.1	143.2
XS631 20	26		310.6	292.9	257.5	227	185	149.2
XS631 21	30		327	308.8	271.8	240	195.9	158.5
XS631 22	30		342	322.5	283.5	250.1	203.8	164.5
XS631 23	30		357.2	336.7	296	260.7	211.6	169.7
XS631 24	37		376.2	355.7	314.1	277.7	226.5	182.8
XS631 25	37		389.6	367.9	324.5	286.5	233.4	188
XS631 26	37		404.7	381.8	336.1	296.4	241	193.7
XS631 27	37		419.6	395.6	347.8	306.3	248.6	199.4
XS631 28	37		434.5	409.4	359.3	316	255.9	204.8
XS631 29	37		449.1	423.1	370.7	325.6	263.1	210

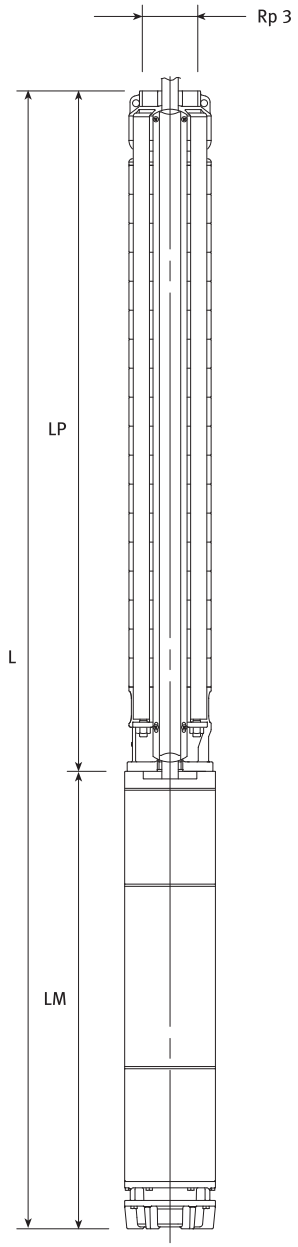

XS631 series dimensions and weights

PUMP	P2	DIMENSIONS (mm)					WEIGHT
TYPE	kW	L	LM	LP	ø D		
					1 cable	2 cables	kg
XS631 16-6	22	2345	943	1402	144	146	109
XS631 17-6	22	2414	943	1471	144	146	111
XS631 18-6	26	2611	1071	1540	144	146	121
XS631 19-6	26	2680	1071	1609	144	146	123
XS631 20-6	26	2749	1071	1678	144	146	124
XS631 21-6	30	2898	1151	1747	144	146	134
XS631 22-6	30	2967	1151	1816	144	146	136
XS631 23-6	30	3036	1151	1885	144	146	137
XS631 24-6	37	3255	1301	1954	144	146	153
XS631 25-6	37	3324	1301	2023	144	146	154
XS631 26-6	37	3393	1301	2092	144	146	156
XS631 27-6	37	3462	1301	2161	144	146	158
XS631 28-6	37	3531	1301	2230	144	146	159
XS631 29-6	37	3600	1301	2299	144	146	161

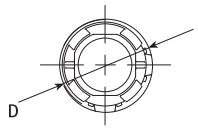

XS631 series from 16 to 29 stages

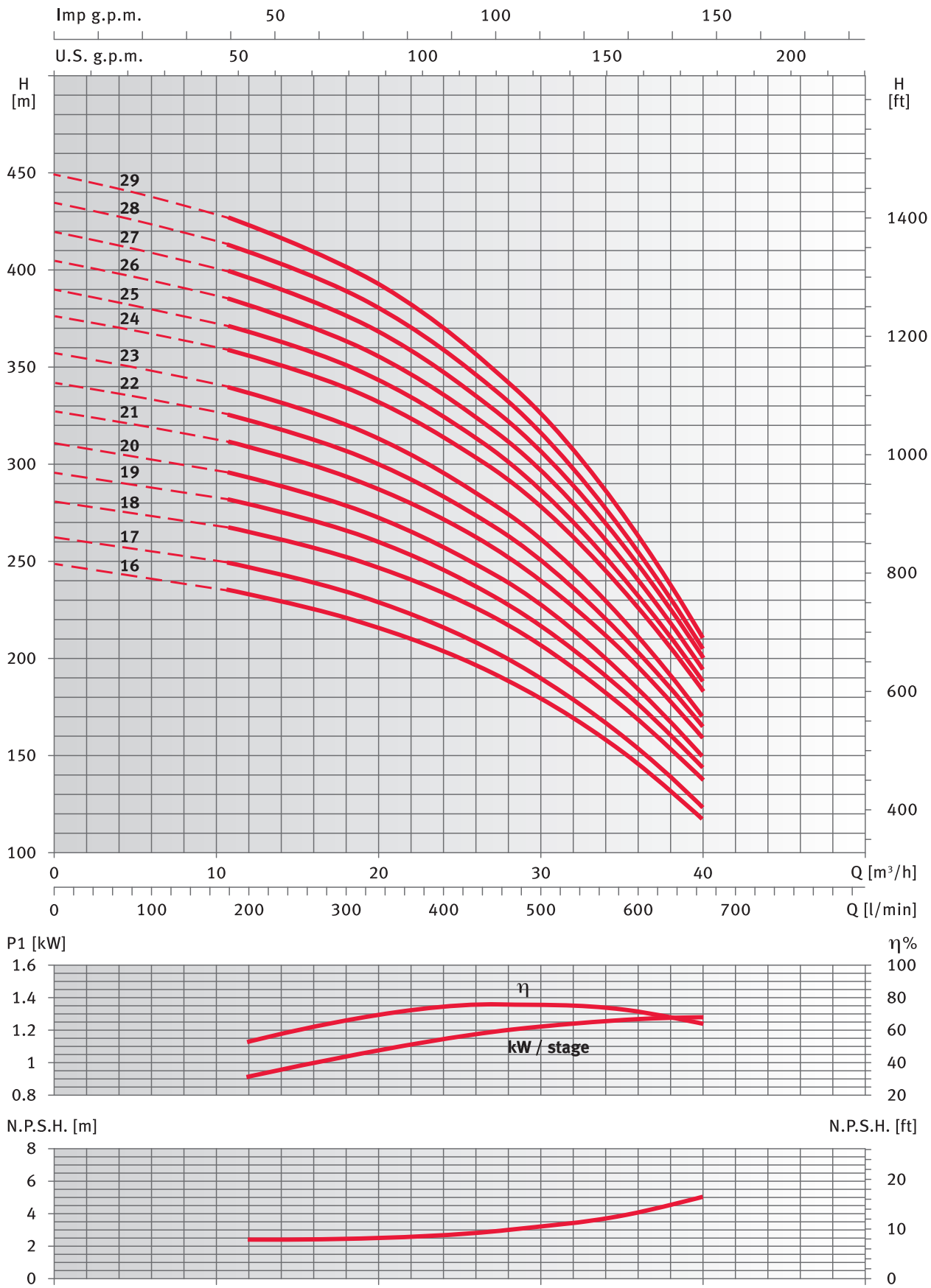

Pump performance valid for liquids with a density of $\rho = 1{,}0$ kg/dm³ and kinematic viscosity of $\upsilon = 1$ mm²/s.

XS631 series from 30 to 43 stages

PUMP	P2	l/min	0	200	400	500	600	666.7
TYPE	kW	m³/h	0	12	24	30	36	40
XS631 30D	45		467.2	440.6	388.4	342.8	279.1	224.5
XS631 31D	45		482.2	454.3	400.1	352.9	286.9	230.4
XS631 32D	45		497.1	468.1	411.8	362.9	294.7	236.3
XS631 33D	45		511.9	481.7	423.4	372.9	302.3	242.1
XS631 34D	45		526.7	495.5	434.8	382.4	309.6	247.5
XS631 35D	45		541.4	509.1	446.3	392.2	317.1	253
XS631 36D	52		556.2	522.5	457.5	401.8	324.3	258.3
XS631 37D	52		574.7	542	476.8	420.1	341.1	273.7
XS631 38D	52		589.8	555.8	488.3	429.9	348.5	279.2
XS631 39D	52		604.5	569.4	499.8	439.6	355.9	284.6
XS631 40D	52		619.4	583.1	511.1	449.2	363.2	290
XS631 41D	52		634.1	596.7	522.4	458.6	370.3	295.2
XS631 42D	55		652.3	614.8	540.5	476.1	386.4	309.8
XS631 43D	55		667	628.4	552	485.9	393.9	315.4

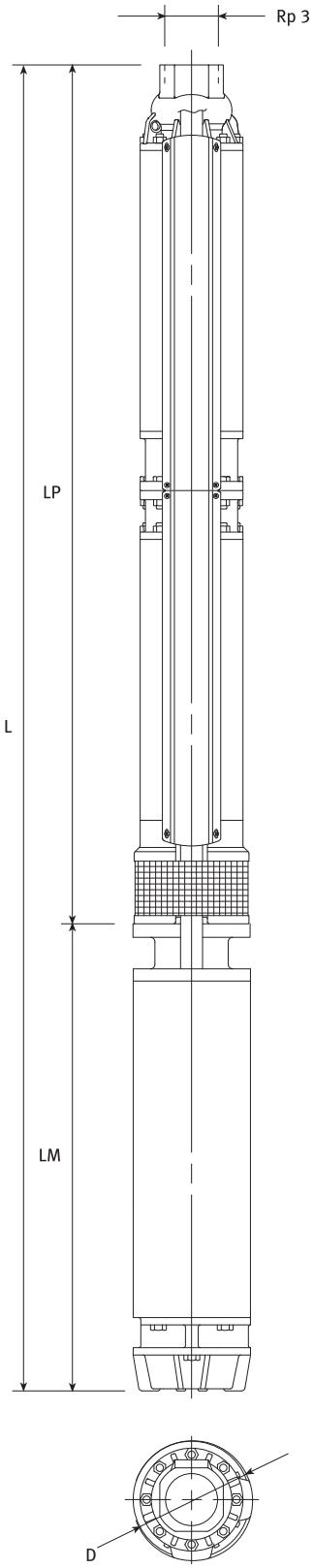

XS631 series dimensions and weights

PUMP	P2	DIMENSIONS (mm)					WEIGHT
TYPE	kW	L	LM	LP	ø D		
					1 cable	2 cables	kg
XS631 30D-8	45	4166	1195	2971	193	195	292
XS631 31D-8	45	4166	1195	2971	193	195	293
XS631 32D-8	45	4166	1195	2971	193	195	294
XS631 33D-8	45	4166	1195	2971	193	195	295
XS631 34D-8	45	4166	1195	2971	193	195	295
XS631 35D-8	45	4580	1195	3385	193	195	308
XS631 36D-8	52	4670	1285	3385	193	195	328
XS631 37D-8	52	4670	1285	3385	193	195	329
XS631 38D-8	52	4670	1285	3385	193	195	330
XS631 39D-8	52	4670	1285	3385	193	195	331
XS631 40D-8	52	4670	1285	3385	193	195	331
XS631 41D-8	52	4808	1285	3523	193	195	335
XS631 42D-8	55	4848	1325	3523	193	195	342
XS631 43D-8	55	4986	1325	3661	193	195	347

XS631 series from to 30 to 43 stages

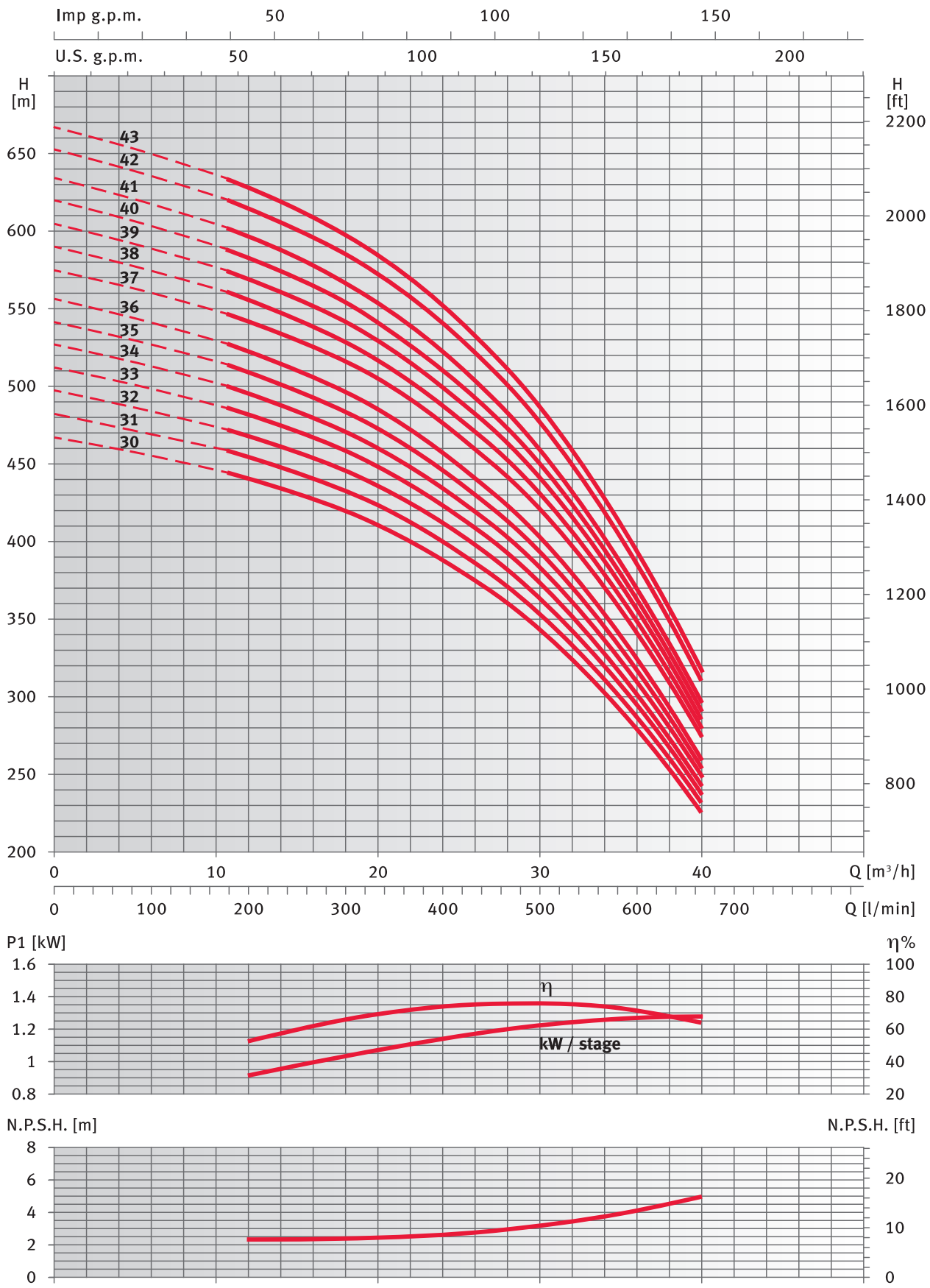

Pump performance valid for liquids with a density of $\rho = 1{,}0$ kg/dm³ and kinematic viscosity of $\upsilon = 1$ mm²/s.

XS646 series from to 1 to 12 stages

PUMP	P2	l/min	0	400	600	700	800	1000
TYPE	kW	m³/h	0	24	36	42	48	60
XS646 01	1.5		16.9	11.4	9	7.9	6.7	3
XS646 02	3		35.1	24	19.4	17.4	15.2	8.8
XS646 03	5.5		52.3	35.9	29.3	26.4	23.3	14
XS646 04	7.5		69	47.6	39	35.3	31.2	18.9
XS646 05	7.5		83.1	58.1	47.7	43.1	38.1	22.7
XS646 06	9.3		100.6	70.1	57.6	52.1	46.2	27.9
XS646 07	11		117.3	81.7	67.3	60.9	54	32.7
XS646 08	13		137.1	93.4	76.7	69.5	61.6	36.9
XS646 09	13		152.7	106	87.4	79.3	70.5	43.5
XS646 10	15		166.8	116.3	95.9	86.9	77.2	47
XS646 11	18.5		186.9	129.8	107.1	97.2	86.5	53.7
XS646 12	18.5		201.2	140.2	115.7	105	93.3	57.3

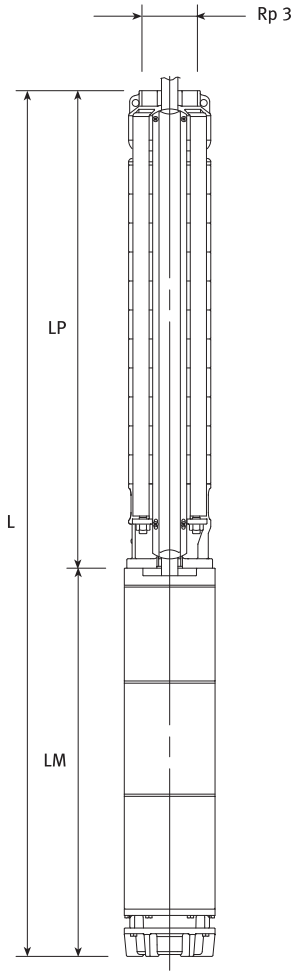

XS646 series dimensions and weights

PUMP	P2	DIMENSIONS (mm)					WEIGHT
TYPE	kW	L	LM	LP	ø D		
					1 cable	2 cables	kg
XS646 01-4	1.5	761	348	413	142	144	22
XS646 02-4	3	1072	544	528	142	144	32
XS646 03-4	5.5	1327	684	643	142	144	42
XS646 04-4	7.5	1522	764	758	142	144	46
XS646 05-4	7.5	1637	764	873	142	144	49
XS646 03-6	5.5	1256	613	643	144	146	57
XS646 04-6	7.5	1411	653	758	144	146	63
XS646 05-6	7.5	1526	653	873	144	146	66
XS646 06-6	9.3	1671	683	988	144	146	72
XS646 07-6	11	1826	723	1103	144	146	79
XS646 08-6	13	1981	763	1218	144	146	85
XS646 09-6	13	2096	763	1333	144	146	88
XS646 10-6	15	2281	833	1448	144	146	98
XS646 11-6	18.5	2466	903	1563	144	146	109
XS646 12-6	18.5	2581	903	1678	144	146	111

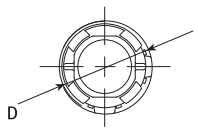

XS646 series from 1 to 12 stages

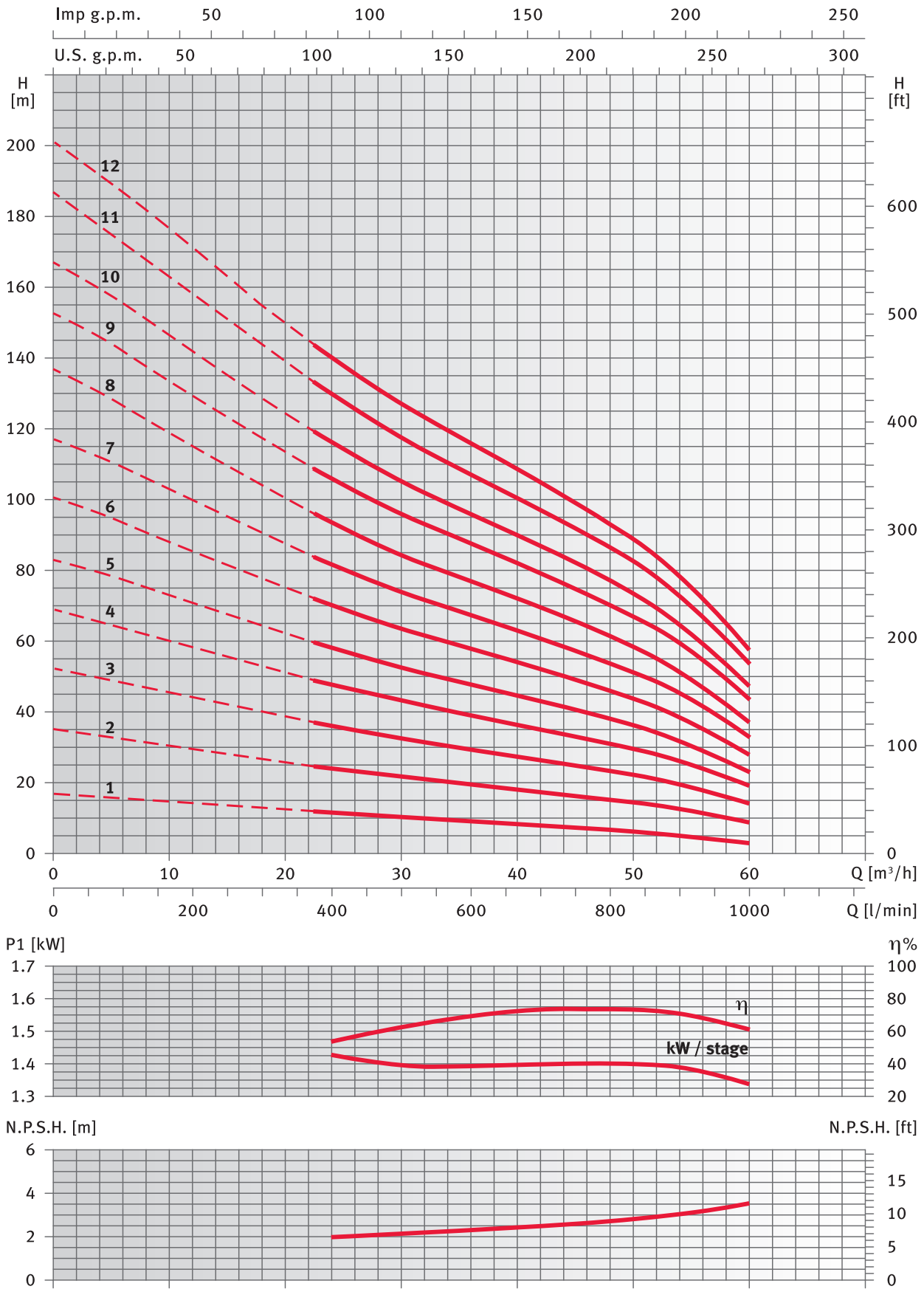

Pump performance valid for liquids with a density of $\rho = 1{,}0$ kg/dm³ and kinematic viscosity of $\upsilon = 1$ mm²/s.

XS646 series from 13 to 25 stages

PUMP	P2	l/min	0	400	600	700	800	1000
TYPE	kW	m³/h	0	24	36	42	48	60
XS646 13	22		221.6	154.4	127.5	115.9	103.3	64.8
XS646 14	22		235.4	164.9	136.2	123.7	110.2	68.6
XS646 15	22		248.8	175	144.6	131.2	116.8	72.1
XS646 16	26		276	191.7	158.6	144.2	128.8	82
XS646 17	26		290.6	202.4	167.4	152.2	135.8	86
XS646 18	30		310	215.4	178.3	162.2	144.9	92.1
XS646 19	30		324.7	226.1	187.1	170.1	151.9	96.1
XS646 20	30		339.1	236.7	195.8	177.9	158.7	100
XS646 21	37		361.2	251.8	208.4	189.6	169.5	108.2
XS646 22	37		375.7	262.5	217.3	197.7	176.6	112.3
XS646 23	37		389.8	273	225.9	205.4	183.4	116
XS646 24	37		403.6	283.3	234.5	213.2	190.2	119.6
XS646 25	37		417.1	293.6	243	220.8	196.8	123.1

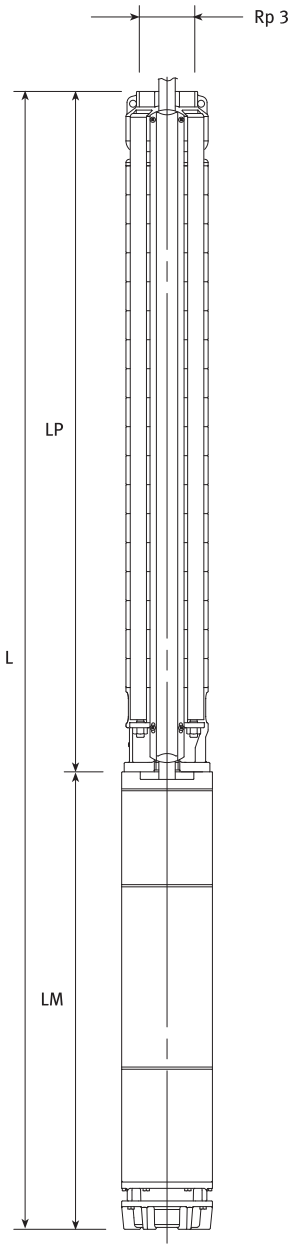

XS646 series dimensions and weights

PUMP	P2	DIMENSIONS (mm)					WEIGHT
TYPE	kW	L	LM	LP	ø D		
					1 cable	2 cables	kg
XS646 13-6	22	2736	943	1793	144	146	117
XS646 14-6	22	2851	943	1908	144	146	119
XS646 15-6	22	2966	943	2023	144	146	122
XS646 16-6	26	3209	1071	2138	144	146	133
XS646 17-6	26	3324	1071	2253	144	146	136
XS646 18-6	30	3519	1151	2368	144	146	146
XS646 19-6	30	3634	1151	2483	144	146	149
XS646 20-6	30	3749	1151	2598	144	146	151
XS646 21-6	37	4014	1301	2713	144	146	168
XS646 22-6	37	4129	1301	2828	144	146	170
XS646 23-6	37	4244	1301	2943	144	146	173
XS646 24-6	37	4359	1301	3058	144	146	175
XS646 25-6	37	4474	1301	3173	144	146	178

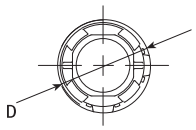

XS646 series from 13 to 25 stages

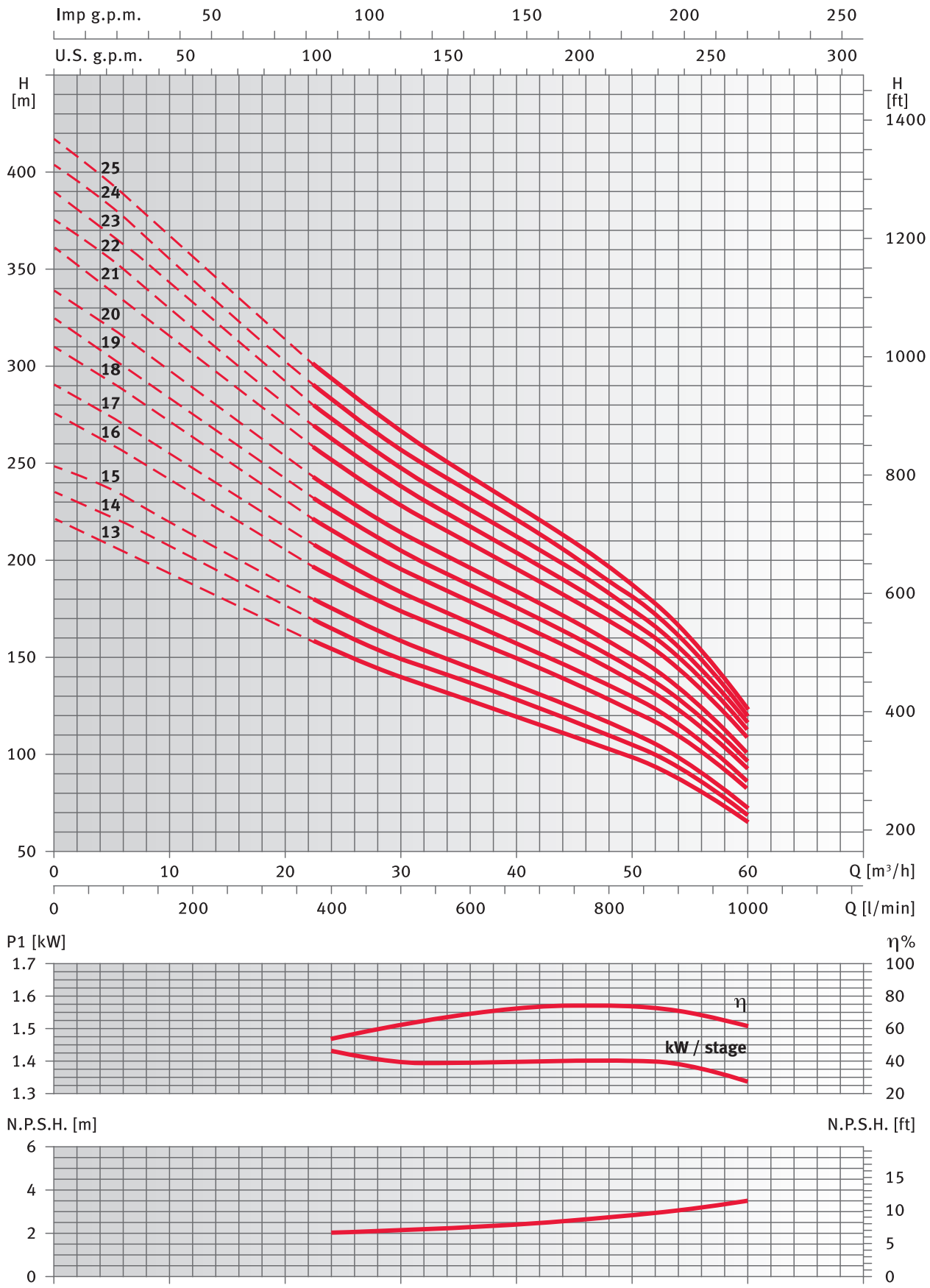

Pump performance valid for liquids with a density of $\rho = 1{,}0$ kg/dm³ and kinematic viscosity of $\upsilon = 1$ mm²/s.

XS646 series from 26 to 37 stages

PUMP	P2	l/min	0	400	600	700	800	1000
TYPE	kW	m³/h	0	24	36	42	48	60
XS646 26D	45		447.2	310.1	256.7	233.6	208.7	132.7
XS646 27D	45		462.1	320.8	265.5	241.5	215.6	136.5
XS646 28D	45		476.8	331.4	274.2	249.4	222.6	140.5
XS646 29D	45		491.8	341.8	282.9	257.2	229.5	144
XS646 30D	45		506.1	352.2	291.5	264.9	236.2	147.8
XS646 31D	45		520.4	362.4	299.9	272.5	242.9	151.2
XS646 32D	52		543	379.6	314.3	285.9	255.3	161.9
XS646 33D	52		557.2	390	323	293.7	262.1	165.5
XS646 34D	52		570.9	400.2	331.3	301.2	268.8	169.2
XS646 35D	52		584.7	410.5	339.9	308.9	275.4	172.4
XS646 36D	52		598	420.4	348.1	316.3	281.9	175.9
XS646 37D	55		626.5	437.4	362.2	329.4	294	185.8

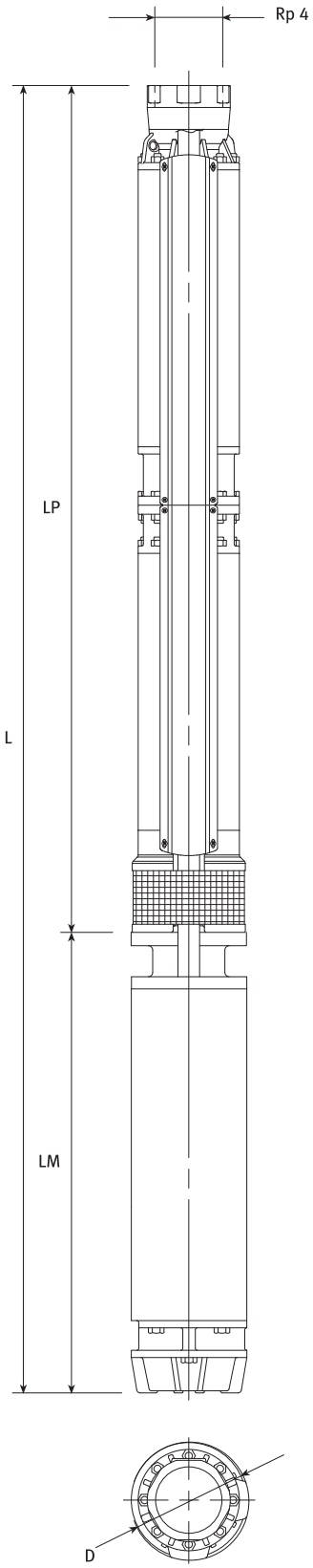

XS646 series dimensions and weights

PUMP	P2	DIMENSIONS (mm)					WEIGHT
TYPE	kW	L	LM	LP	ø D		
					1 cable	2 cables	kg
XS646 26D-8	45	4925	1195	3730	193	195	320
XS646 27D-8	45	4925	1195	3730	193	195	322
XS646 28D-8	45	5270	1195	4075	193	195	332
XS646 29D-8	45	5270	1195	4075	193	195	333
XS646 30D-8	45	5270	1195	4075	193	195	335
XS646 31D-8	45	5385	1195	4190	193	195	337
XS646 32D-8	52	5820	1285	4535	193	195	367
XS646 33D-8	52	5820	1285	4535	193	195	368
XS646 34D-8	52	5820	1285	4535	193	195	370
XS646 35D-8	52	6280	1285	4995	193	195	383
XS646 36D-8	52	6280	1285	4995	193	195	384
XS646 37D-8	55	6320	1325	4995	193	195	392

XS646 series from 26 to 37 stages

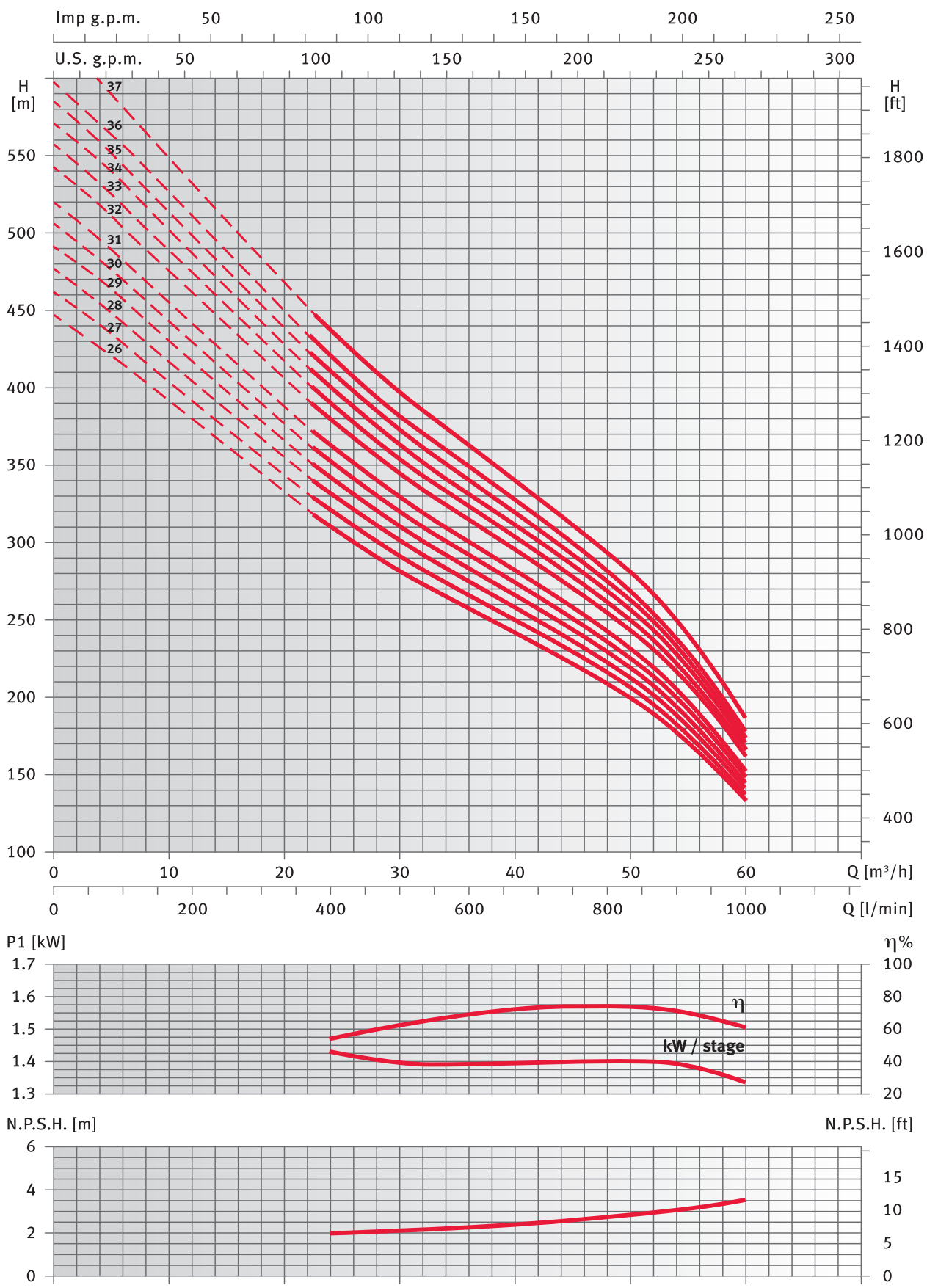

Pump performance valid for liquids with a density of $\rho = 1{,}0$ kg/dm³ and kinematic viscosity of $\upsilon = 1$ mm²/s.

XS660 series from 1 to 10 stages

PUMP TYPE	P2 kW	l/min m³/h	0 0	500 30	700 42	900 54	1100 66	1300 78
XS660 01	2.2		16.2	11.1	8.9	6.8	4.4	
XS660 02	4		33.5	23.6	19.6	16	12	5.9
XS660 03	5.5		50	35.4	29.7	24.6	18.9	10.2
XS660 04	7.5		66	46.9	39.5	33	25.6	14.2
XS660 05	9.3		82.4	58.7	49.5	41.5	32.5	18.5
XS660 06	11		98.5	70.2	59.4	49.9	39.2	22.6
XS660 07	13		115	82	69.4	58.5	46.2	26.9
XS660 08	15		132	94.2	79.8	67.3	53.4	31.5
XS660 09	18.5		150.1	107.1	90.9	76.8	61.3	37
XS660 10	18.5		164.7	117.6	99.8	84.4	67.1	40

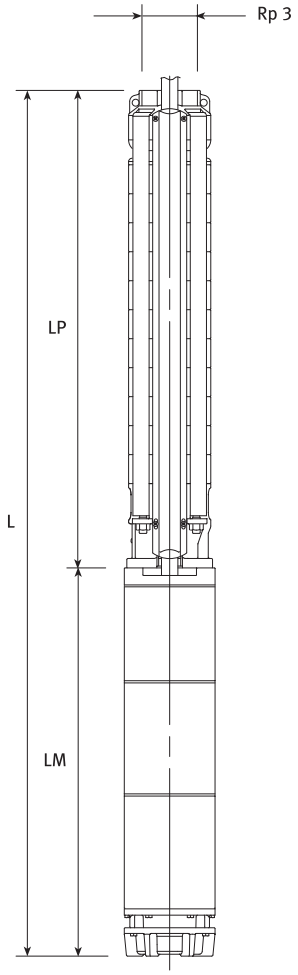

XS660 series dimensions and weights

PUMP TYPE	P2 kW	DIMENSIONS (mm) L	LM	LP	ø D 1 cable	2 cables	WEIGHT kg
XS660 01-4	2.2	806	393	413	142	144	23
XS660 02-4	4	1142	614	528	142	144	36
XS660 03-4	5.5	1327	684	643	142	144	42
XS660 04-4	7.5	1522	764	758	142	144	46
XS660 02-6	4	1111	583	528	144	146	50
XS660 03-6	5.5	1256	613	643	144	146	57
XS660 04-6	7.5	1411	653	758	144	146	63
XS660 05-6	9.3	1556	683	873	144	146	70
XS660 06-6	11	1711	723	988	144	146	76
XS660 07-6	13	1866	763	1103	144	146	83
XS660 08-6	15	2051	833	1218	144	146	93
XS660 09-6	18.5	2236	903	1333	144	146	104
XS660 10-6	18.5	2351	903	1448	144	146	106

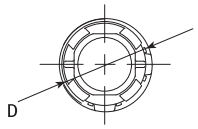

XS660 series from 1 to 10 stages

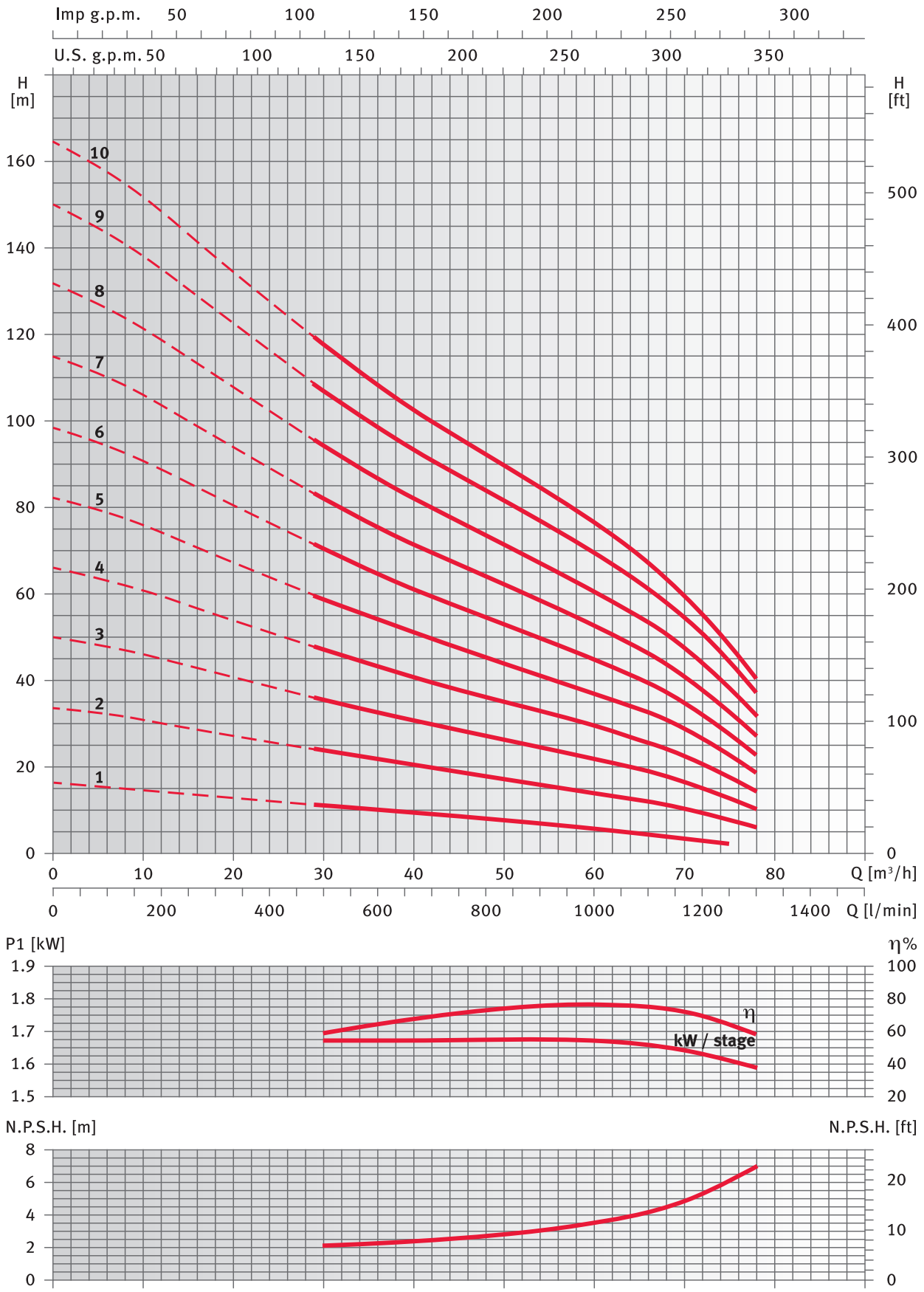

Pump performance valid for liquids with a density of $\rho = 1{,}0$ kg/dm³ and kinematic viscosity of $\upsilon = 1$ mm²/s.

XS660 series from 11 to 21 stages

PUMP	P2	l/min	0	500	700	900	1100	1300
TYPE	kW	m³/h	0	30	42	54	66	78
XS660 11	22		183.6	131.3	111.6	94.6	75.7	46.3
XS660 12	22		198.1	141.9	120.5	102.1	81.6	49.4
XS660 13	22		211.8	152.2	129.2	109.3	87.2	52.1
XS660 14	26		234.8	168.1	143	121.5	97.8	60.8
XS660 15	26		249.5	178.8	152.1	129.1	103.7	63.9
XS660 16	30		267.6	191.7	163.1	138.6	111.6	69.4
XS660 17	30		282.2	202.2	172.1	146.2	117.5	72.5
XS660 18	37		302.6	216.9	184.7	157.1	126.8	79.6
XS660 19	37		317.2	227.6	193.8	164.8	132.8	82.8
XS660 20	37		331.3	238	202.6	172.2	138.6	85.8
XS660 21	37		345.5	248.4	211.4	179.6	144.3	88.6

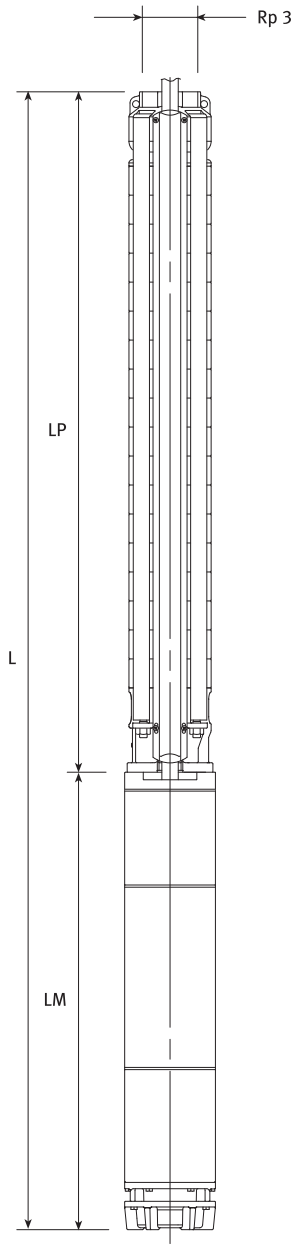

XS660 series dimensions and weights

PUMP	P2	DIMENSIONS (mm)					WEIGHT
TYPE	kW	L	LM	LP	ø D		
					1 cable	2 cables	kg
XS660 11-6	22	2506	943	1563	144	146	112
XS660 12-6	22	2621	943	1678	144	146	114
XS660 13-6	22	2736	943	1793	144	146	117
XS660 14-6	26	2979	1071	1908	144	146	128
XS660 15-6	26	3094	1071	2023	144	146	131
XS660 16-6	30	3289	1151	2138	144	146	141
XS660 17-6	30	3404	1151	2253	144	146	144
XS660 18-6	37	3669	1301	2368	144	146	160
XS660 19-6	37	3784	1301	2483	144	146	163
XS660 20-6	37	3899	1301	2598	144	146	165
XS660 21-6	37	4014	1301	2713	144	146	168

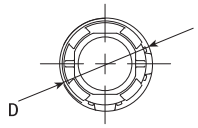

XS660 series from 11 to 21 stages

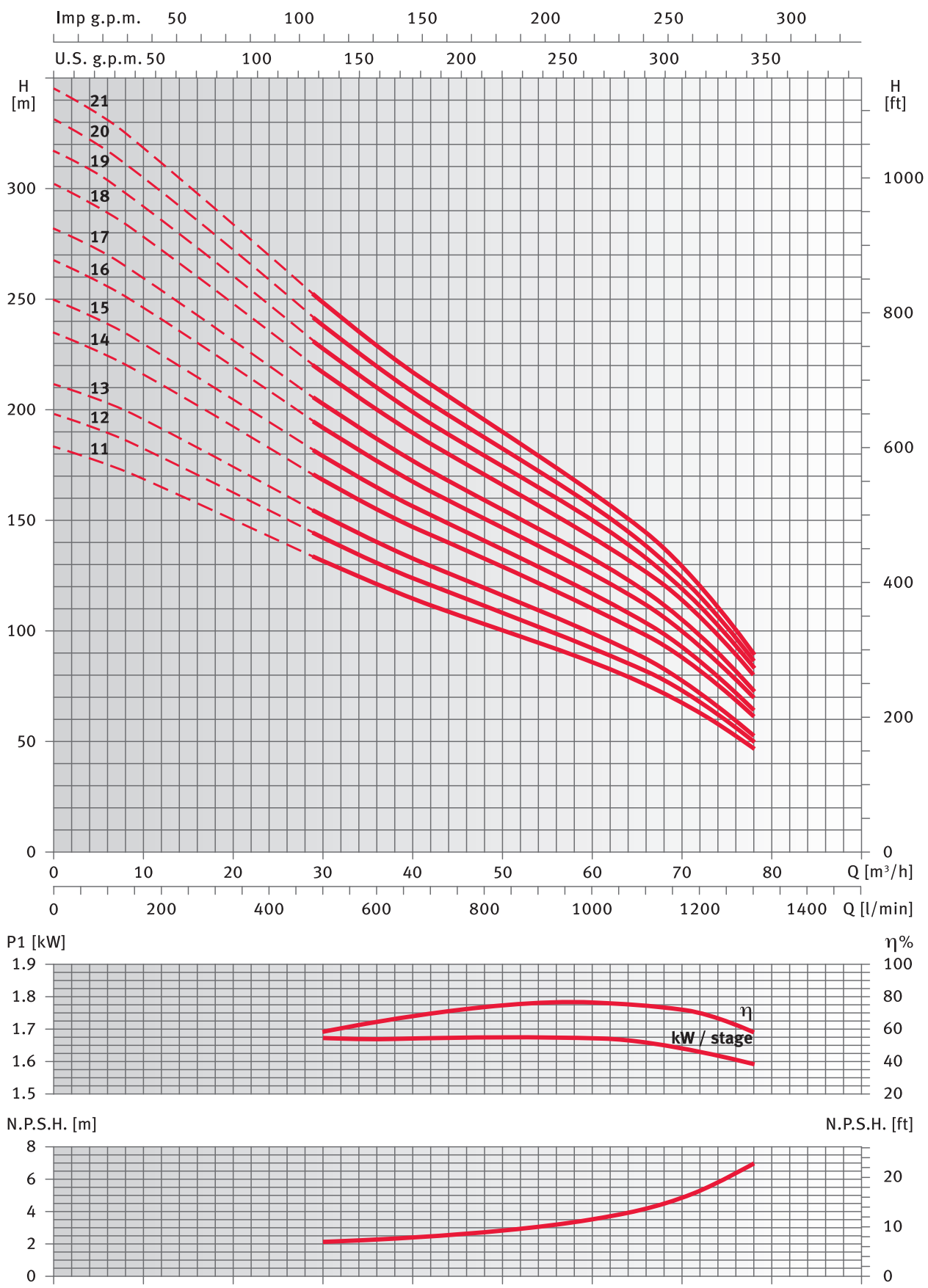

Pump performance valid for liquids with a density of $\rho = 1{,}0$ kg/dm³ and kinematic viscosity of $\upsilon = 1$ mm²/s.

XS660 series from 12 to 32 stages

PUMP	P2	l/min	0	500	700	900	1100	1300
TYPE	kW	m³/h	0	24	36	42	48	60
XS660 22D	45		369	264	224.9	191.4	154.5	96.7
XS660 23D	45		384	274.8	234.1	199.2	160.5	99.9
XS660 24D	45		398.7	285.4	243.1	206.7	166.4	103.1
XS660 25D	45		413.3	295.9	251.9	214.2	172.3	106.1
XS660 26D	45		427.9	306.3	260.8	221.7	178	108.9
XS660 27D	52		449.5	322.5	274.8	233.9	188.7	117.9
XS660 28D	52		463.8	333	283.6	241.2	194.5	120.8
XS660 29D	52		477.7	343.3	292.3	248.6	200.3	123.7
XS660 30D	52		491.7	353.5	301	255.8	205.7	126.4
XS660 31D	55		515	369.4	314.7	267.9	216.2	134.8
XS660 32D	55		529.3	379.8	323.6	275.3	221.9	137.8

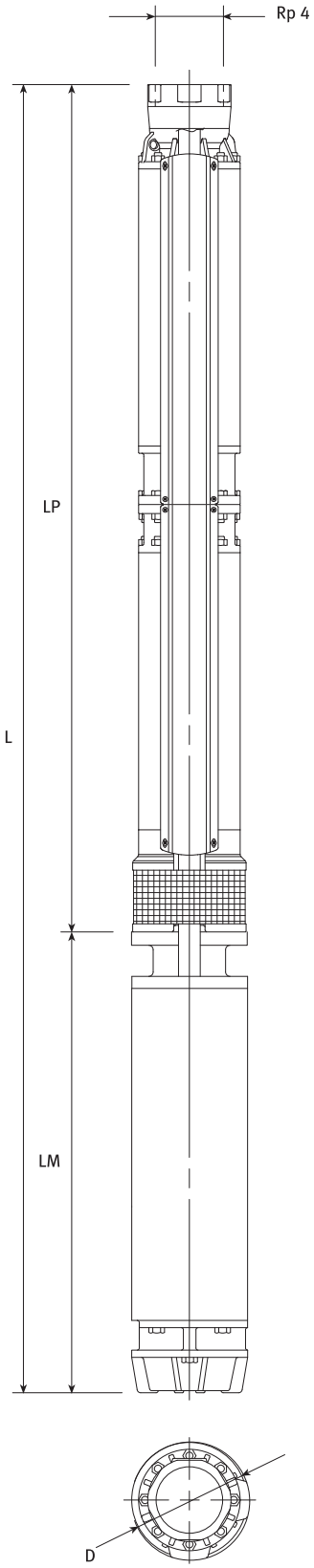

XS660 series dimensions and weights

PUMP	P2	DIMENSIONS (mm)					WEIGHT
TYPE	kW	L	LM	LP	ø D		
					1 cable	2 cables	kg
XS660 22D-8	45	4580	1195	3385	193	195	308
XS660 23D-8	45	4580	1195	3385	193	195	309
XS660 24D-8	45	4580	1195	3385	193	195	310
XS660 25D-8	45	4925	1195	3730	193	195	319
XS660 26D-8	45	4925	1195	3730	193	195	320
XS660 27D-8	52	5015	1285	3730	193	195	342
XS660 28D-8	52	5360	1285	4075	193	195	352
XS660 29D-8	52	5360	1285	4075	193	195	353
XS660 30D-8	52	5360	1285	4075	193	195	355
XS660 31D-8	55	5515	1325	4190	193	195	363
XS660 32D-8	55	5860	1325	4535	193	195	373

XS660 series from 12 to 32 stages

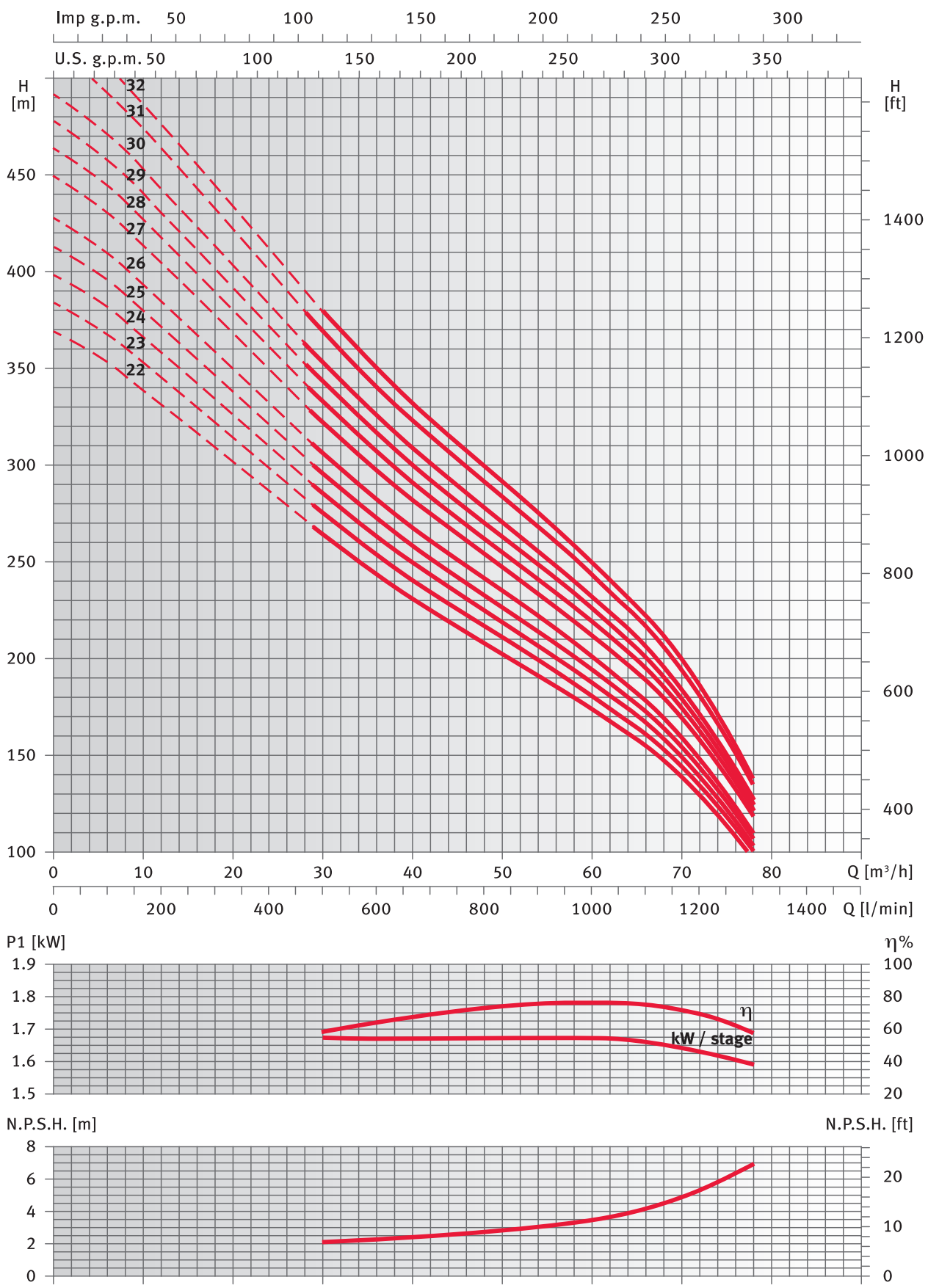

Pump performance valid for liquids with a density of $\rho = 1{,}0$ kg/dm³ and kinematic viscosity of $\upsilon = 1$ mm²/s.

XS612 series from 1 to 39 stages

PUMP TYPE	MAX. POWER ABSORBED TYPE at 2900 min-1 (kW)	DIMENSIONS (mm) LP	ø D 1 cable	ø D 2 cables	WEIGHT kg
XS612 01-4	0.5	380	142	144	9
XS612 02-4	1	426	142	144	10
XS612 03-4	1.4	472	142	144	12
XS612 04-4	1.9	518	142	144	13
XS612 05-4	2.4	564	142	144	14
XS612 06-4	2.9	610	142	144	15
XS612 07-4	3.4	656	142	144	16
XS612 08-4	3.9	702	142	144	17
XS612 09-4	4.4	748	142	144	19
XS612 10-4	4.8	794	142	144	20
XS612 11-4	5.3	840	142	144	21
XS612 12-4	5.8	886	142	144	22
XS612 13-4	6.3	932	142	144	23
XS612 14-4	6.7	978	142	144	24
XS612 15-4	7.2	1024	142	144	26
XS612 07-6	3.4	656	142	144	16
XS612 08-6	3.9	702	142	144	17
XS612 09-6	4.4	748	142	144	19
XS612 10-6	4.8	794	142	144	20
XS612 11-6	5.3	840	142	144	21
XS612 12-6	5.8	886	142	144	22
XS612 13-6	6.3	932	142	144	23
XS612 14-6	6.7	978	142	144	24
XS612 15-6	7.2	1024	142	144	26
XS612 16-6	7.7	1070	142	144	27
XS612 17-6	8.2	1116	142	144	28
XS612 18-6	8.7	1162	142	144	29
XS612 19-6	9.1	1208	142	144	30
XS612 20-6	9.6	1254	142	144	32
XS612 21-6	10.1	1300	142	144	33
XS612 22-6	10.6	1346	142	144	34
XS612 23-6	11.1	1438	142	144	36
XS612 24-6	11.5	1484	142	144	37
XS612 25-6	11.9	1530	142	144	38
XS612 26-6	12.4	1576	142	144	40
XS612 27-6	12.9	1622	142	144	41
XS612 28-6	13.4	1668	142	144	42
XS612 29-6	13.9	1714	142	144	43
XS612 30-6	14.3	1760	142	144	44
XS612 31-6	14.8	1806	142	144	46
XS612 32-6	15.3	1852	142	144	47
XS612 33-6	16	1898	142	144	48
XS612 34-6	16.3	1944	142	144	49
XS612 35-6	16.8	1990	142	144	50
XS612 36-6	17.3	2082	142	144	52
XS612 37-6	17.8	2128	142	144	54
XS612 38-6	18.2	2174	142	144	55
XS612 39-6	18.7	2220	142	144	56

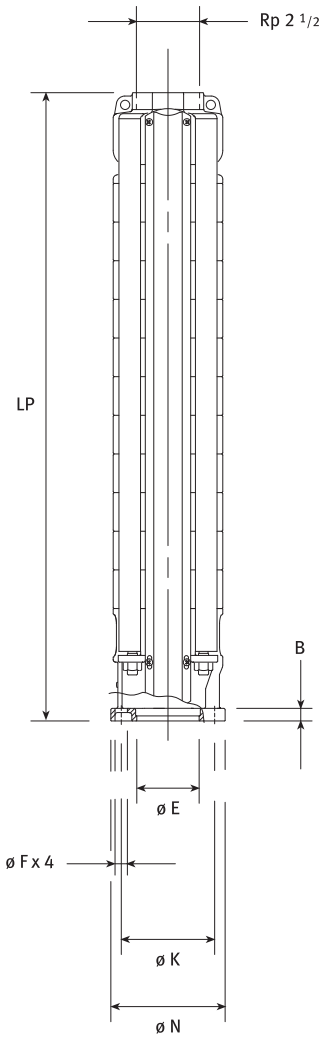

XS612 series 4” and 6” motor coupling

MOTOR	DIMENSIONS (mm) N	K	F	B	E H7
4” (NEMA)	130	76.2	9.5	10.5	87.3
6” (NEMA)	136	111.1	14.5	15	76.2

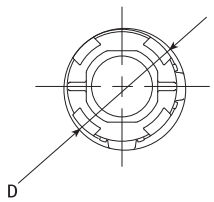

XS612 series from 40 to 60 stages

PUMP TYPE	MAX. POWER ABSORBED TYPE at 2900 min-1 (kW)	DIMENSIONS (mm) LP	ø D 1 cable	ø D 2 cables	WEIGHT kg
XS612 40D-6	19.2	2922	177	180	114
XS612 41D-6	19.7	2922	177	180	115
XS612 42D-6	20.2	2922	177	180	116
XS612 43D-6	20.6	2922	177	180	116
XS612 44D-6	21.1	2922	177	180	117
XS612 45D-6	21.6	2922	177	180	117
XS612 46D-6	22.1	2922	177	180	118
XS612 47D-6	22.6	2922	177	180	118
XS612 48D-6	23	3336	177	180	131
XS612 49D-6	23.6	3336	177	180	132
XS612 50D-6	24	3336	177	180	132
XS612 51D-6	24.5	3336	177	180	133
XS612 52D-6	24.9	3336	177	180	133
XS612 53D-6	25.4	3336	177	180	134
XS612 54D-6	25.9	3336	177	180	135
XS612 55D-6	26.4	3336	177	180	135
XS612 56D-6	26.9	3336	177	180	136
XS612 57D-6	27.3	3474	177	180	140
XS612 58D-6	27.8	3474	177	180	140
XS612 59D-6	28.3	3474	177	180	141
XS612 60D-6	28.8	3612	177	180	145

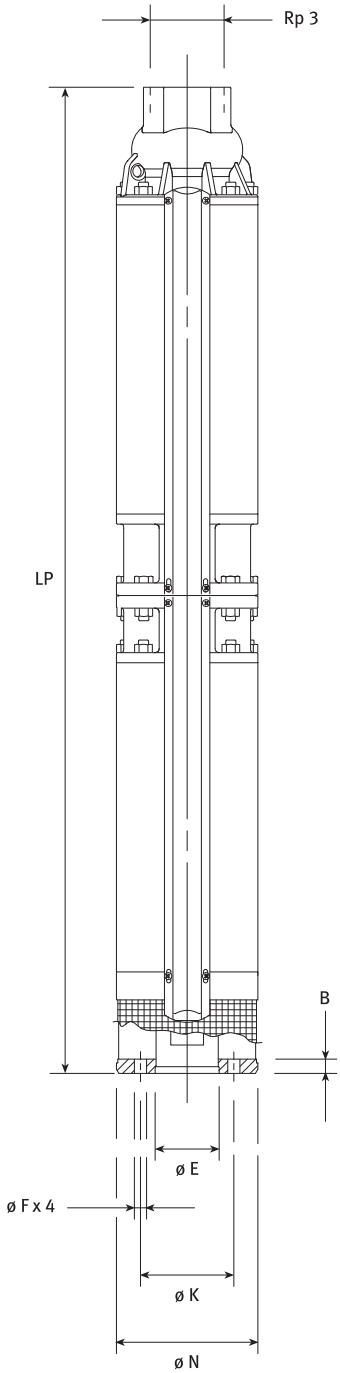

XS612 series 6” motor coupling

MOTOR	DIMENSIONS (mm) N	K	F	B	E H7
6” (NEMA)	168	111.1	14.5	17	76.2

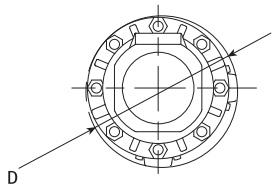

XS616 series from 1 to 36 stages

PUMP TYPE	MAX. POWER ABSORBED TYPE at 2900 min-1 (kW)	DIMENSIONS (mm) LP	ø D 1 cable	ø D 2 cables	WEIGHT kg
XS616 01-4	0.8	380	142	144	9
XS616 02-4	1.7	426	142	144	10
XS616 03-4	2.5	472	142	144	12
XS616 04-4	3	518	142	144	13
XS616 05-4	3.8	564	142	144	14
XS616 06-4	4.5	610	142	144	15
XS616 07-4	5.2	656	142	144	16
XS616 08-4	5.9	702	142	144	17
XS616 09-4	6.6	748	142	144	19
XS616 10-4	7.3	794	142	144	20
XS616 05-6	3.8	564	142	144	14
XS616 06-6	4.5	610	142	144	15
XS616 07-6	5.2	656	142	144	16
XS616 08-6	5.9	702	142	144	17
XS616 09-6	6.6	748	142	144	19
XS616 10-6	7.3	794	142	144	20
XS616 11-6	8.1	840	142	144	21
XS616 12-6	8.6	886	142	144	22
XS616 13-6	9.3	932	142	144	23
XS616 14-6	10	978	142	144	24
XS616 15-6	10.8	1024	142	144	26
XS616 16-6	11.5	1070	142	144	27
XS616 17-6	12.3	1116	142	144	28
XS616 18-6	13.1	1162	142	144	29
XS616 19-6	13.8	1208	142	144	30
XS616 20-6	14.3	1254	142	144	32
XS616 21-6	15	1300	142	144	33
XS616 22-6	15.7	1346	142	144	34
XS616 23-6	16.4	1438	142	144	36
XS616 24-6	17.1	1484	142	144	37
XS616 25-6	17.9	1530	142	144	38
XS616 26-6	18.6	1576	142	144	40
XS616 27-6	19.3	1622	142	144	41
XS616 28-6	20	1668	142	144	42
XS616 29-6	20.7	1714	142	144	43
XS616 30-6	21.4	1760	142	144	44
XS616 31-6	22.1	1806	142	144	46
XS616 32-6	22.8	1852	142	144	47
XS616 33-6	23.5	1898	142	144	48
XS616 34-6	24.2	1944	142	144	49
XS616 35-6	25	1990	142	144	50
XS616 36-6	25.7	2082	142	144	52

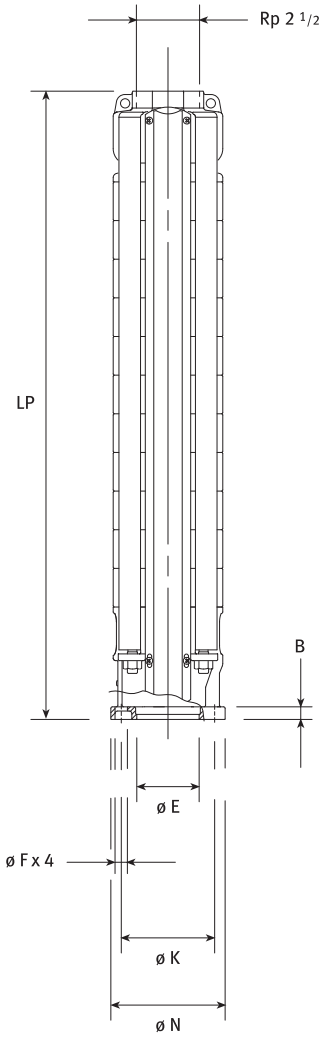

XS616 series 4” and 6” motor coupling

MOTOR	DIMENSIONS (mm) N	K	F	B	E H7
4” (NEMA)	130	76.2	9.5	10.5	87.3
6” (NEMA)	136	111.1	14.5	15	76.2

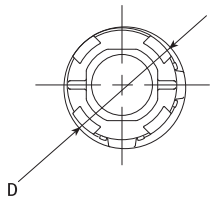

XS616 series from 37 to 56 stages

PUMP TYPE	MAX. POWER ABSORBED TYPE at 2900 min-1 (kW)	DIMENSIONS (mm) LP	ø D 1 cable	ø D 2 cables	WEIGHT kg
XS616 37D-6	26.4	2508	177	180	103
XS616 38D-6	27.1	2508	177	180	103
XS616 39D-6	27.8	2922	177	180	114
XS616 40D-6	28.5	2922	177	180	114
XS616 41D-6	29.3	2922	177	180	115
XS616 42D-6	30	2922	177	180	116
XS616 43D-6	30.6	2922	177	180	116
XS616 44D-6	31.4	2922	177	180	117
XS616 45D-6	32.1	2922	177	180	117
XS616 46D-6	32.8	2922	177	180	118
XS616 47D-6	33.5	2922	177	180	118
XS616 48D-6	34.3	3336	177	180	131
XS616 49D-6	35	3336	177	180	132
XS616 50D-6	35.7	3336	177	180	132
XS616 51D-6	36.4	3336	177	180	133
XS616 52D-6	37.2	3336	177	180	133
XS616 53D-8	37.8	3385	193	195	136
XS616 54D-8	38.6	3385	193	195	137
XS616 55D-8	39.3	3385	193	195	138
XS616 56D-8	40	3385	193	195	138

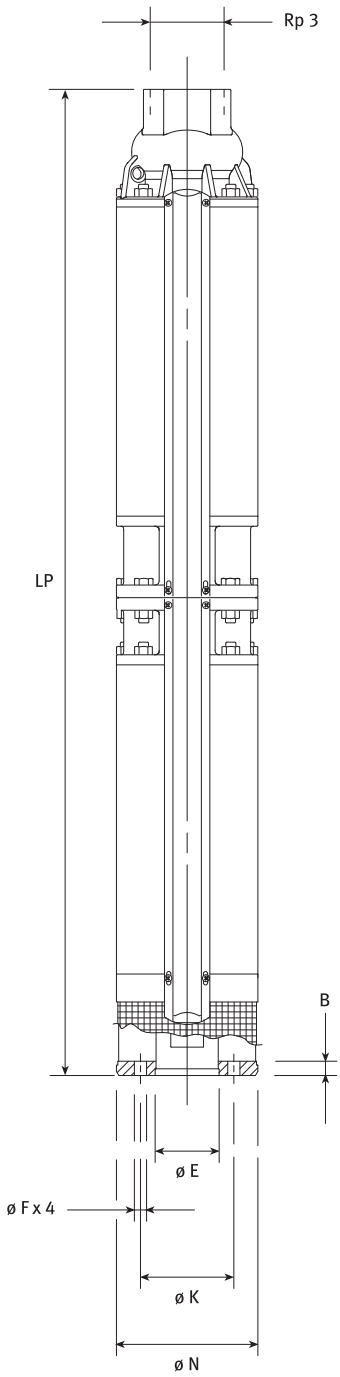

XS616 series 4” and 8” motor coupling

MOTOR	DIMENSIONS (mm) N	K	F	B	E H7
6” (NEMA)	168	111.1	14.5	17	76.2
8” (NEMA)	188	152.4	17.5	18	127

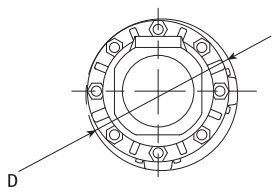

XS622 series from 1 to 33 stages

PUMP TYPE	MAX. POWER ABSORBED TYPE at 2900 min-1 (kW)	DIMENSIONS (mm) LP	ø D 1 cable	ø D 2 cables	WEIGHT kg
XS622 01-4	1.1	357	142	144	9
XS622 02-4	2.1	426	142	144	10
XS622 03-4	3.1	495	142	144	12
XS622 04-4	4.1	564	142	144	14
XS622 05-4	5.2	633	142	144	15
XS622 06-4	6.1	702	142	144	17
XS622 07-4	7.1	771	142	144	18
XS622 04-6	4.1	564	142	144	14
XS622 05-6	5.2	633	142	144	15
XS622 06-6	6.1	702	142	144	17
XS622 07-6	7.1	771	142	144	18
XS622 08-6	8	840	142	144	20
XS622 09-6	9	909	142	144	21
XS622 10-6	10.2	978	142	144	23
XS622 11-6	11.2	1047	142	144	24
XS622 12-6	12.3	1116	142	144	26
XS622 13-6	13.3	1185	142	144	27
XS622 14-6	14.2	1254	142	144	29
XS622 15-6	15.2	1323	142	144	31
XS622 16-6	16.3	1392	142	144	32
XS622 17-6	17.4	1461	142	144	34
XS622 18-6	18.4	1530	142	144	35
XS622 19-6	19.4	1599	142	144	37
XS622 20-6	20.4	1668	142	144	39
XS622 21-6	21.4	1737	142	144	40
XS622 22-6	22.4	1806	142	144	42
XS622 23-6	23.4	1875	142	144	43
XS622 24-6	24.5	1944	142	144	45
XS622 25-6	25.5	2013	142	144	47
XS622 26-6	26.5	2082	142	144	48
XS622 27-6	27.2	2151	142	144	50
XS622 28-6	28.2	2220	142	144	51
XS622 29-6	29.2	2289	142	144	53
XS622 30-6	30.2	2358	142	144	54
XS622 31-6	31.5	2427	142	144	56
XS622 32-6	32.5	2493	142	144	57
XS622 33-6	33.5	2565	142	144	59

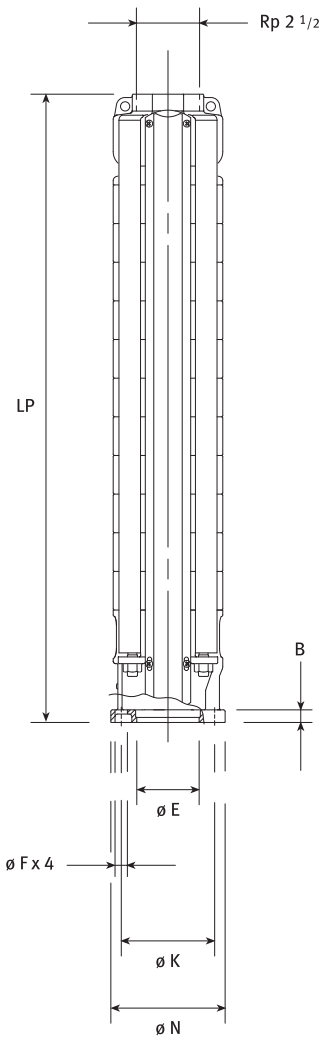

XS622 series 4” and 6” motor coupling

MOTOR	DIMENSIONS (mm) N	K	F	B	E H7
4” (NEMA)	130	76.2	9.5	10.5	87.3
6” (NEMA)	136	111.1	14.5	15	76.2

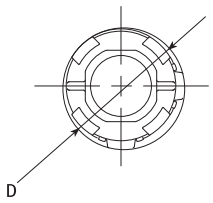

XS622 series from 34 to 50 stages

PUMP TYPE	MAX. POWER ABSORBED TYPE at 2900 min-1 (kW)	DIMENSIONS (mm) LP	ø D 1 cable	ø D 2 cables	WEIGHT kg
XS622 34D-6	34.5	2922	177	180	113
XS622 35D-6	35.6	3336	177	180	125
XS622 36D-6	36.6	3336	177	180	126
XS622 37D-6	37.6	3336	177	180	127
XS622 38D-8	38.6	3385	193	195	130
XS622 39D-8	39.6	3385	193	195	131
XS622 40D-8	40.6	3385	193	195	131
XS622 41D-8	41.7	3523	193	195	135
XS622 42D-8	42.7	3523	193	195	136
XS622 43D-8	43.7	3661	193	195	141
XS622 44D-8	44.7	3661	193	195	141
XS622 45D-8	45.7	3868	193	195	147
XS622 46D-8	46.7	3868	193	195	148
XS622 47D-8	47.8	3868	193	195	148
XS622 48D-8	48.8	4075	193	195	155
XS622 49D-8	49.8	4075	193	195	156
XS622 50D-8	50.8	4075	193	195	157

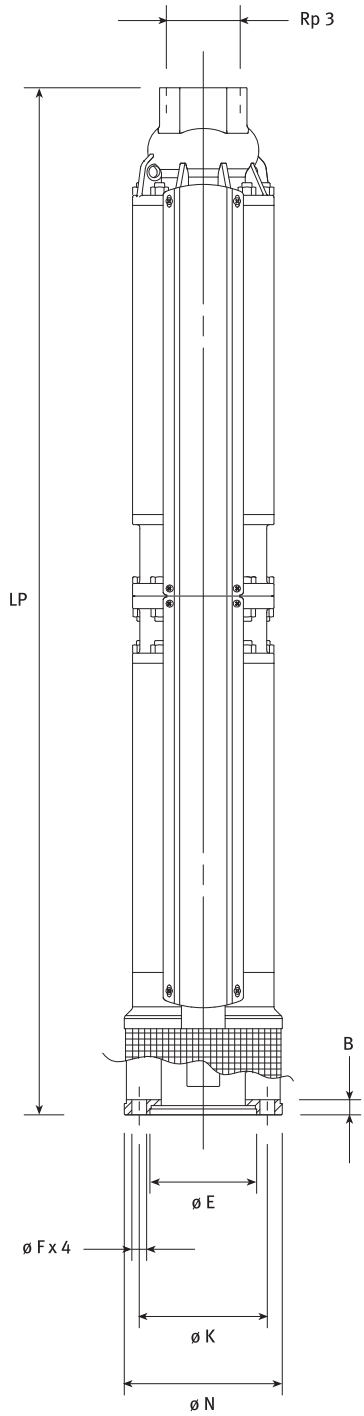

XS622 series 4” and 8” motor coupling

MOTOR	DIMENSIONS (mm) N	K	F	B	E H7
6” (NEMA)	168	111.1	14.5	17	76.2
8” (NEMA)	188	152.4	17.5	18	127

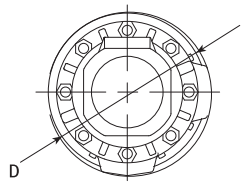

XS631 series

PUMP TYPE	MAX. POWER ABSORBED TYPE at 2900 min-1 (kW)	DIMENSIONS (mm) LP	ø D 1 cable	ø D 2 cables	WEIGHT kg
XS631 01-4	1.3	367	142	144	9
XS631 02-4	2.6	436	142	144	10
XS631 03-4	3.9	505	142	144	12
XS631 04-4	5.2	574	142	144	14
XS631 05-4	6.6	643	142	144	15
XS631 06-4	7.8	712	142	144	17
XS631 03-6	3.9	505	142	144	12
XS631 04-6	5.2	574	142	144	14
XS631 05-6	6.6	643	142	144	15
XS631 06-6	7.8	712	142	144	17
XS631 07-6	9.2	781	142	144	18
XS631 08-6	10.5	850	142	144	20
XS631 09-6	11.7	919	142	144	21
XS631 10-6	13	988	142	144	23
XS631 11-6	14.3	1057	142	144	24
XS631 12-6	15.7	1126	142	144	26
XS631 13-6	17	1195	142	144	27
XS631 14-6	18.3	1264	142	144	29
XS631 15-6	19.6	1333	142	144	31
XS631 16-6	20.9	1402	142	144	32
XS631 17-6	22	1471	142	144	34
XS631 18-6	23.2	1540	142	144	35
XS631 19-6	24.5	1609	142	144	37
XS631 20-6	25.8	1678	142	144	38
XS631 21-6	27.1	1747	142	144	40
XS631 22-6	28.4	1816	142	144	42
XS631 23-6	30.1	1885	142	144	43
XS631 24-6	31.6	1954	142	144	45
XS631 25-6	32.7	2023	142	144	46
XS631 26-6	34	2092	142	144	48
XS631 27-6	35.3	2161	142	144	50
XS631 28-6	36.7	2230	142	144	51
XS631 29-6	38	2299	142	144	53
XS631 30D-8	39.3	2971	193	195	112
XS631 31D-8	40.6	2971	193	195	113
XS631 32D-8	41.9	2971	193	195	114
XS631 33D-8	43.2	2971	193	195	115
XS631 34D-8	44.5	2971	193	195	115
XS631 35D-8	45.8	3385	193	195	128
XS631 36D-8	47.1	3385	193	195	128
XS631 37D-8	48.4	3385	193	195	129
XS631 38D-8	49.7	3385	193	195	130
XS631 39D-8	51.1	3385	193	195	131
XS631 40D-8	52.4	3385	193	195	131
XS631 41D-8	53.7	3523	193	195	135
XS631 42D-8	55	3523	193	195	136
XS631 43D-8	56.3	3661	193	195	141

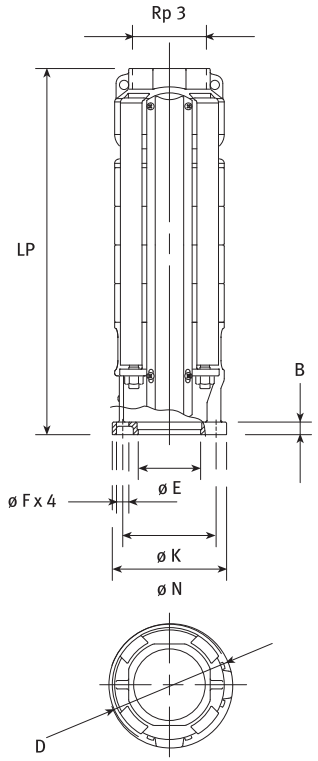

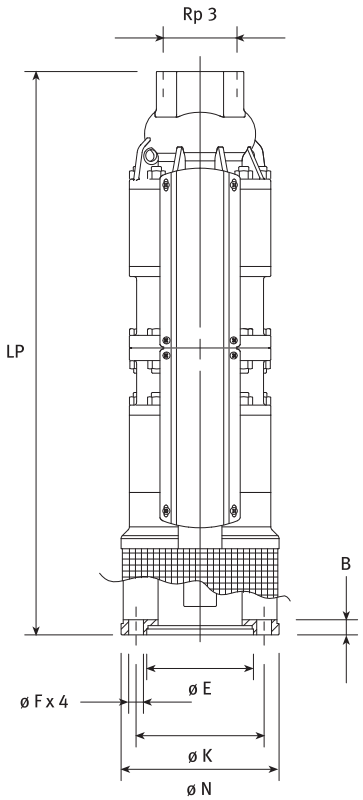

XS631 series 4”, 6” and 8” motor coupling

MOTOR	DIMENSIONS (mm) N	K	F	B	E H7
4” (NEMA)	130	76.2	9.5	10.5	87.3
6” (NEMA)	136	111.1	14.5	15	76.2
8” (NEMA)	188	152.4	17.5	18	127

XS646 series

PUMP TYPE	MAX. POWER ABSORBED TYPE at 2900 min-1 (kW)	DIMENSIONS (mm) LP	ø D 1 cable	ø D 2 cables	WEIGHT kg
XS646 01-4	1.5	413	142	144	10
XS646 02-4	3	528	142	144	12
XS646 03-4	4.5	643	142	144	15
XS646 04-4	6	758	142	144	17
XS646 05-4	7.5	873	142	144	20
XS646 03-6	4.5	643	142	144	15
XS646 04-6	6	758	142	144	17
XS646 05-6	7.5	873	142	144	20
XS646 06-6	9	988	142	144	22
XS646 07-6	10.5	1103	142	144	25
XS646 08-6	12	1218	142	144	27
XS646 09-6	13.5	1333	142	144	30
XS646 10-6	15	1448	142	144	32
XS646 11-6	16.5	1563	142	144	35
XS646 12-6	18	1678	142	144	37
XS646 13-6	19.5	1793	142	144	40
XS646 14-6	21	1908	142	144	42
XS646 15-6	22.5	2023	142	144	45
XS646 16-6	24.1	2138	142	144	47
XS646 17-6	25.6	2253	142	144	50
XS646 18-6	27.1	2368	142	144	52
XS646 19-6	28.6	2483	142	144	55
XS646 20-6	30.1	2598	142	144	57
XS646 21-6	31.6	2713	142	144	60
XS646 22-6	33.1	2828	142	144	62
XS646 23-6	34.6	2943	142	144	65
XS646 24-6	36.1	3058	142	144	67
XS646 25-6	37.6	3173	142	144	70
XS646 26D-8	39.1	3730	193	195	140
XS646 27D-8	40.6	3730	193	195	142
XS646 28D-8	42.1	4075	193	195	152
XS646 29D-8	43.6	4075	193	195	153
XS646 30D-8	45.1	4075	193	195	155
XS646 31D-8	46.6	4190	193	195	157
XS646 32D-8	48.1	4535	193	195	167
XS646 33D-8	49.6	4535	193	195	168
XS646 34D-8	51.1	4535	193	195	170
XS646 35D-8	52.6	4995	193	195	183
XS646 36D-8	54.1	4995	193	195	184
XS646 37D-8	55.6	4995	193	195	186

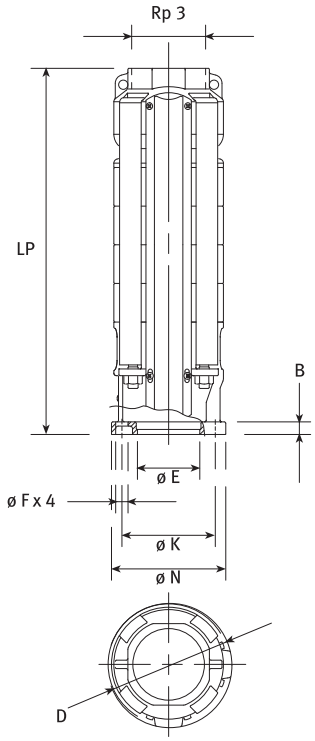

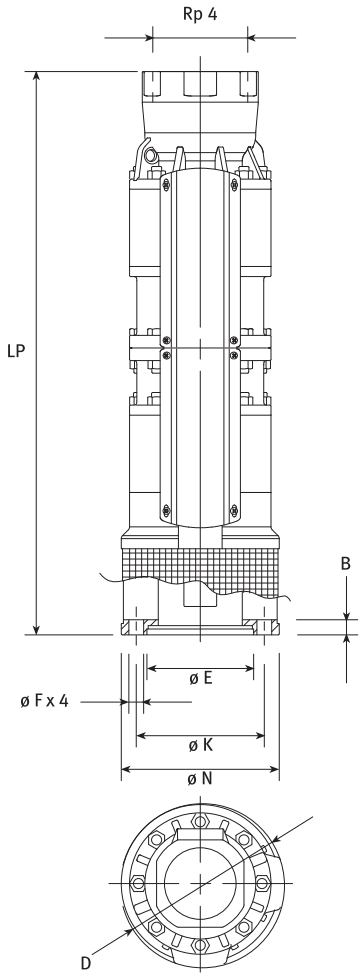

XS646 series 4", 6" and 8" motor coupling

MOTOR	DIMENSIONS (mm) N	K	F	B	E H7
4" (NEMA)	130	76.2	9.5	10.5	87.3
6" (NEMA)	136	111.1	14.5	15	76.2
8" (NEMA)	188	152.4	17.5	18	127

XS660 series

PUMP TYPE	MAX. POWER ABSORBED TYPE at 2900 min-1 (kW)	DIMENSIONS (mm) LP	ø D 1 cable	ø D 2 cables	WEIGHT kg
XS660 01-4	1.8	413	142	144	10
XS660 02-4	3.5	528	142	144	12
XS660 03-4	5.3	643	142	144	15
XS660 04-4	7.1	758	142	144	17
XS660 02-6	3.5	528	142	144	12
XS660 03-6	5.3	643	142	144	15
XS660 04-6	7.1	758	142	144	17
XS660 05-6	8.8	873	142	144	20
XS660 06-6	10.6	988	142	144	22
XS660 07-6	12.4	1103	142	144	25
XS660 08-6	14.2	1218	142	144	27
XS660 09-6	15.9	1333	142	144	30
XS660 10-6	17.7	1448	142	144	32
XS660 11-6	19.5	1563	142	144	35
XS660 12-6	21.2	1678	142	144	37
XS660 13-6	23	1793	142	144	40
XS660 14-6	24.8	1908	142	144	42
XS660 15-6	26.5	2023	142	144	45
XS660 16-6	28.3	2138	142	144	47
XS660 17-6	30.1	2253	142	144	50
XS660 18-6	31.8	2368	142	144	52
XS660 19-6	33.6	2483	142	144	55
XS660 20-6	35.4	2598	142	144	57
XS660 21-6	37.1	2713	142	144	60
XS660 22D-8	38.9	3385	193	195	128
XS660 23D-8	40.7	3385	193	195	129
XS660 24D-8	42.4	3385	193	195	130
XS660 25D-8	44.2	3730	193	195	139
XS660 26D-8	46	3730	193	195	140
XS660 27D-8	47.8	3730	193	195	142
XS660 28D-8	49.5	4075	193	195	152
XS660 29D-8	51.3	4075	193	195	153
XS660 30D-8	53.1	4075	193	195	155
XS660 31D-8	54.8	4190	193	195	157
XS660 32D-8	56.6	4535	193	195	167

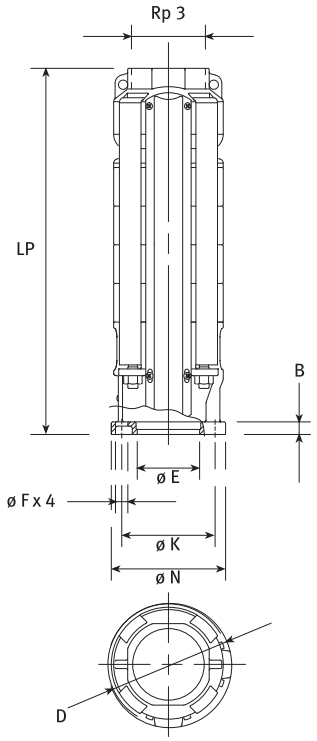

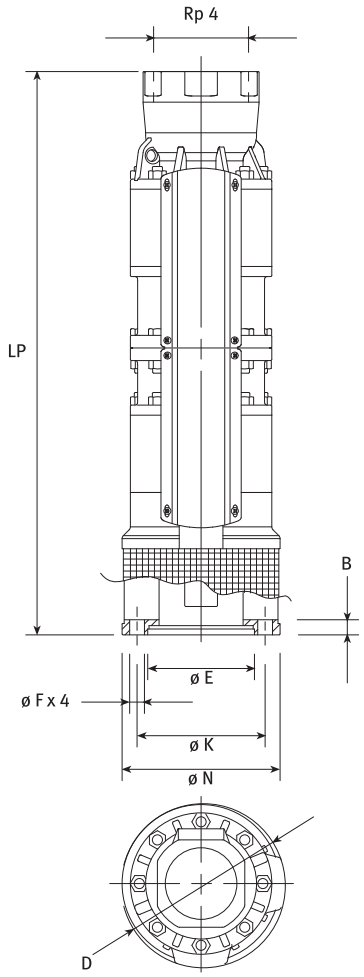

XS660 series 4", 6" and 8" motor coupling

MOTOR	DIMENSIONS (mm) N	K	F	B	E H7
4" (NEMA)	130	76.2	9.5	10.5	87.3
6" (NEMA)	136	111.1	14.5	15	76.2
8" (NEMA)	188	152.4	17.5	18	127

XS6 Series

4”, 6” and 8” O4I, E6W and CP8 submersible motors

50 Hz

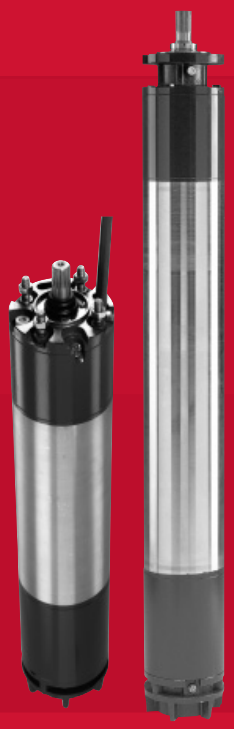

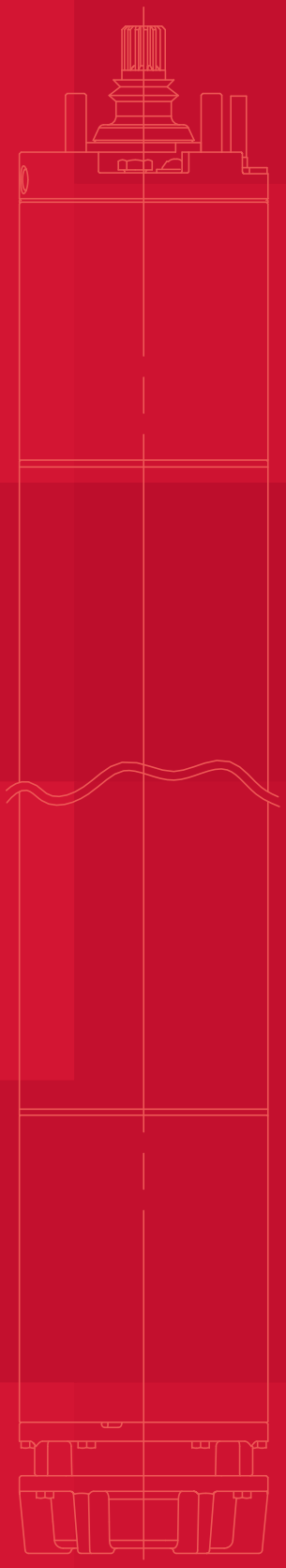

XS6 Series → Technical characteristics for 4” submersible motors O4I

Description

- Motors immersed in a coolant liquid.
- The choice of construction materials guarantees optimum operating performance, superior quality, reliability and ease of installation.

Electrical and motor specifications

- Outer casing made of stainless steel.
- Projecting shaft element and coupling elevations based on the NEMA guidelines.
- Rewindable stator.
- High starting torque.
- F-insulation class motor.
- Protection class: IP68.
- Filling liquid compliant with the guidelines for oils in contact with food substances.
  (F.D.A.- FOOD AND DRUG ADMINISTRATION).
- Compensation bellows for expanding of liquid inside.
- Axial load supported by oblique ball bearings.
- Mechanical seal with anti-sand protection.
- Maximum immersion depth: 150 m.
- Maximum number of start-ups per hour distributed on a fairy basis: 30 for direct start-up; 20 for start-up with impedances.
- Maximum deviation allowed for line voltage compared to nominal voltage: 230V ±10%, 400V ±10%.
- Maximum water temperature: 35ºC.
- Max. temperature is taken for motors operating in a facility able to ensure a water flow around the motor casing of at least 0,08 m/s water pH: 4÷8.
- Axial thrust: 3000 N from 0,37 to 2,2 kW; 6500 N from 3 to 7,5 kW.
- Detachable power cable fitted with watertight connector.
- Versions:
  Single-phase: from 0,37 to 2,2 kW 220-240 V, 50 Hz
  Three-phase: from 0,37 to 7,5 kW 220-240 V, 50 Hz
  from 0,37 to 7,5 kW 380-415 V, 50 Hz.
- Horizontal operation up to 2,2 kW.
- Applications with inverter.

Executions on request

- Special voltages.

Identification data

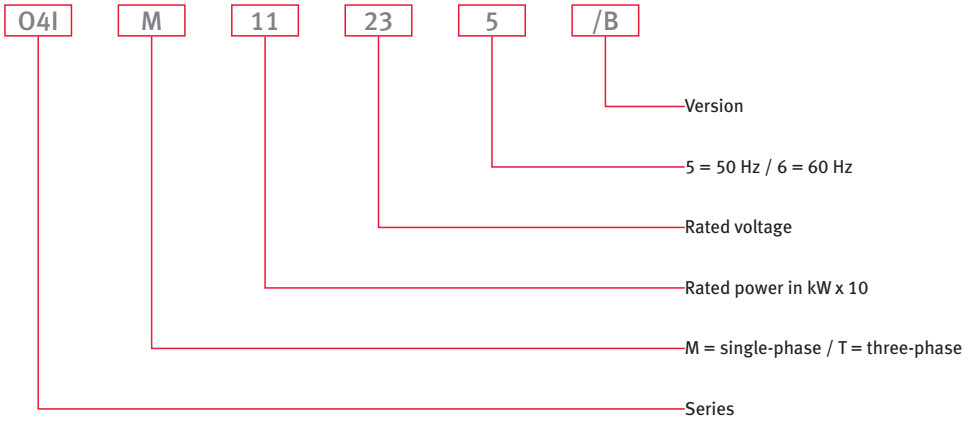

EXAMPLE: O4I11M235/B
O4I motor; Nominal power 1,1 kW. Single-phase; Nominal voltage 230 V. 50 Hz. Version /B

O4I motors

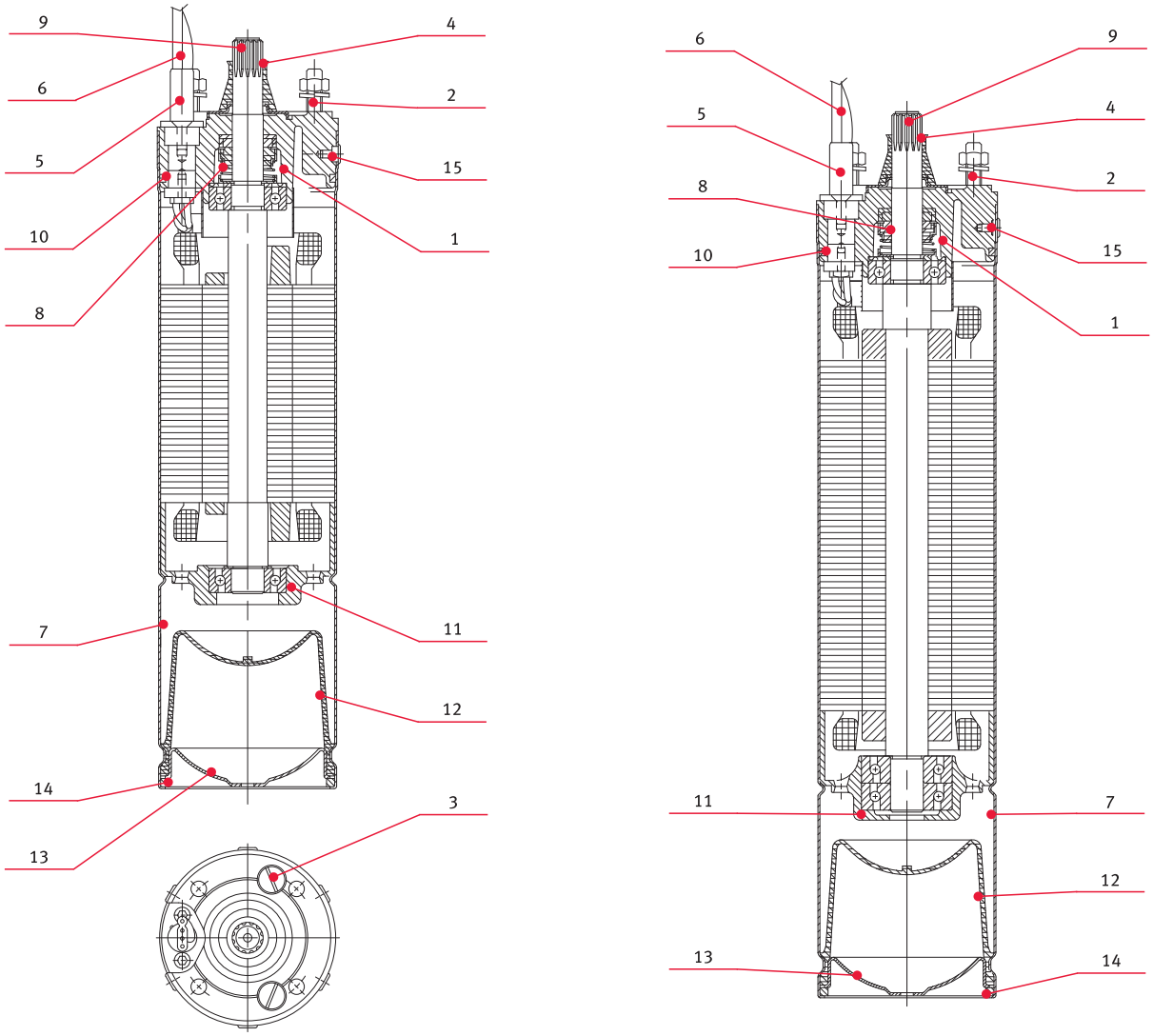

REF. No	DESCRIPTION	MATERIALS	REF. STANDARDS EUROPE	REF. STANDARDS USA
1	Head	Brass	EN12165-CuZn40Pb2 (CW617N)	
2	Posts	Stainless steel	EN 10088-3 - X5CrNi18-10 (1.4301)	AISI 304
3	Filling caps	Brass	EN12165-CuZn40Pb2 (CW617N)	
4	Anti-sand	NBR		
5	Connector casing	Stainless steel	EN 10088-1 - X5CrNi18-10 (1.4301)	AISI 304
6	Cable	EPDM		
7	Outer framework	Stainless steel	EN 10088-1 - X5CrNi18-10 (1.4301)	AISI 304
8	Mechanical seal	Carbon / Ceramic		
9	Shaft projection for P ≤ 2.2 kW	Stainless steel	EN 10088-3 - X8CrNiS18-9 (1.4305)	AISI 303
	Shaft projection for 3 ≤ P 7.5 kW	Stainless steel	EN 10088-1 - X2CrNiMoN22-5-3 (1.4462)	UNS S 31803
10	Elastomers	NBR		
11	Lower support	Cast	EN1561-GJL-200 (JL1030)	ASTM Class 25
12	Compensation bellows	NBR		
13	Lower protection	Stainless steel	EN 10088-1 - X5CrNi18-10 (1.4301)	AISI 304
14	Elastic ring	Stainless steel	EN 10088-1 - X5CrNi18-10 (1.4301)	AISI 304
15	Screws	Stainless steel	EN 10088-3 - X5CrNi18-10 (1.4301)	AISI 304
	Coolant liquid	Non-toxic oil		

O4I series motors dimensions and weights

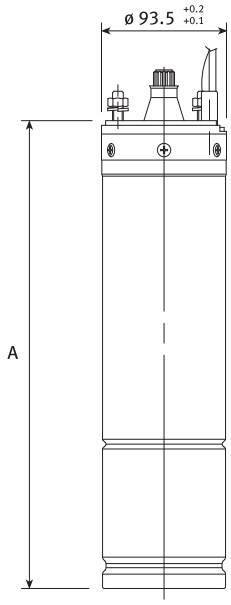

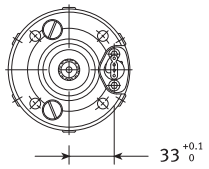

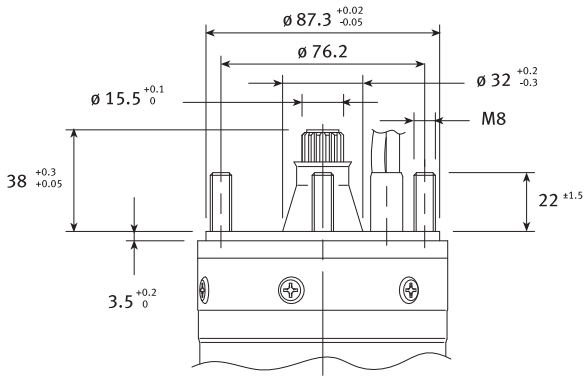

MOTOR TYPE	P2 kW	P2 HP	DIMENSIONS MAX (mm) A	WEIGHT kg
O4I 03M 235	0.37	0.5	355	7.3
O4I 03T 405			334	6.8
O4I 05M 235	0.55	0.75	355	7.9
O4I 05T 405			355	7.3
O4I 07M 235	0.75	1	380	9
O4I 07T 405			355	7.9
O4I 11M 235	1.1	1.5	415	10.9
O4I 11T 405			380	9
O4I 15M 235	1.5	2	450	12.5
O4I 15T 405			415	11.1
O4I 22M 235	2.2	3	500	14.8
O4I 22T 405			450	12.6
O4I 30T 405	3	4	450	13.6
O4I 40T 405	4	5.5	570	17.5
O4I 55T 405	5.5	7.5	630	21
O4I 75T 405	7.5	10	836	28.5

Single-phase O4I series motors operating characteristics 50 Hz

MOTOR TYPE SINGLE-PHASE	P2 kW	P2 HP	RATED VOLTAGE V	CONDENSER µF/450V	OPERATING CHARACTERISTICS WITH P2 RATED CURRENT A	rpm	η %	cosφ	DIRECT START-UP Ts/Tn*	Is/In	MAX. WATER TEMPERATURE °C	TYPE OF CABLE Ncxsez. (mm²)	L(m)
O4I 03M 235	0.37	0.5	220	16	3	2835	56.8	0.98	0.56	3.08	35	4x1.5	1.75
			230		3.1	2845	54.7	0.96	0.62	3.17			
			240		3.2	2860	52.5	0.93	0.68	3.2			
O4I 05M 235	0.55	0.75	220	20	4.1	2815	62.4	0.98	0.60	2.93	35	4x1.5	1.75
			230		4.1	2830	60.4	0.96	0.66	3.02			
			240		4.3	2845	58.4	0.92	0.72	3.06			
O4I 07M 235	0.75	1	220	30	5.4	2825	63.3	0.99	0.57	3.07	35	4x1.5	1.75
			230		5.5	2840	61.6	0.97	0.63	3.2			
			240		5.6	2855	59.9	0.94	0.69	3.27			
O4I 11M 235	1.1	1.5	220	40	7.5	2820	67.6	0.99	0.62	2.97	35	4x1.5	1.75
			230		7.4	2840	66.3	0.98	0.68	3.14			
			240		7.6	2850	63.9	0.95	0.74	3.2			
O4I 15M 235	1.5	2	220	50	10	2830	69.3	0.98	0.48	3.1	35	4x1.5	1.75
			230		10.1	2845	67.6	0.96	0.53	3.22			
			240		10.5	2855	64.9	0.92	0.58	3.22			
O4I 22M 235	2.2	3	220	70	14.3	2805	71.1	0.99	0.46	2.71	35	4x1.5	2.5
			230		14.1	2820	69.6	0.97	0.5	2.86			
			240		14.4	2840	67.7	0.94	0.55	2.93			

* Ts/Tn = ratio between starting torque and rated torque

Single-phase O4I series motors operating characteristics 50 Hz

MOTOR TYPE	P2		RATED VOLTAGE	OPERATING CHARACTERISTICS WITH P2				DIRECT START-UP		MAX WATER TEMPERATURE	TYPE OF CABLE	
THREE-PHASE	kW	HP	V	RATED CURRENT A	rpm	η %	cosφ	Ts/Tn*	Is/In	°C	Ncxsez. (mm²)	L(m)
O4I 03T 235	0.37	0.5	220	2	2835	62	0.78	3.4	5.1	35	4x1.5	1.75
			230	2.1	2855	62	0.72	3.8	5.3			
			240	2.2	2865	61	0.68	4.1	5.3			
O4I 05T 235	0.55	0.75	220	2.8	2795	65	0.8	2.8	4.6	35	4x1.5	1.75
			230	2.9	2820	64	0.75	3.1	4.7			
			240	3	2835	63	0.71	3.4	4.7			
O4I 07T 235	0.75	1	220	3.8	2790	68	0.78	3.3	4.6	35	4x1.5	1.75
			230	4	2815	67	0.71	3.6	4.7			
			240	4.2	2825	65	0.67	3.9	4.6			
O4I 11T 235	1.1	1.5	220	5.1	2780	72	0.8	2.7	4.2	35	4x1.5	1.75
			230	5.2	2810	71	0.74	3	4.4			
			240	5.4	2820	70	0.7	3.2	4.3			
O4I 15T 235	1.5	2	220	7	2790	73	0.78	3	4.7	35	4x1.5	1.75
			230	7.2	2815	72	0.72	3.4	4.8			
			240	7.6	2825	70	0.68	3.7	4.7			
O4I 22T 235	2.2	3	220	9.7	2785	74	0.8	2.3	4.7	35	4x1.5	2.5
			230	10	2810	74	0.74	2.6	4.8			
			240	10.5	2825	73	0.69	2.7	4.7			
O4I 30T 235	3	4	220	12.1	2810	77	0.85	1.8	4.2	35	4x1.5	2.5
			230	12	2830	77	0.81	2	4.5			
			240	12.3	2845	77	0.77	2.2	4.6			
O4I 40T 235	4	5.5	220	16.4	2810	75	0.85	2.2	4.8	35	4x1.5	2.5
			230	16.5	2840	76	0.8	2.4	5			
			240	17	2850	75	0.76	2.6	5			
O4I 55T 235	5.5	7.5	220	22.9	2795	76	0.83	1.8	4.6	35	4x1.5	2.5
			230	23	2820	77	0.78	2	4.8			
			240	23.7	2840	77	0.73	2.2	4.9			
O4I 75T 235	7.5	10	220	31	2820	78	0.82	1.9	4.9	35	4x1.5	4
			230	31.4	2850	79	0.76	2.1	5.1			
			240	32.4	2860	78	0.71	2.3	5.1			
O4I 03T 405	0.37	0.5	380	1.2	2835	62	0.78	3.4	5.1	35	4x1.5	1.75
			400	1.2	2855	62	0.72	3.8	5.3			
			415	1.2	2865	61	0.68	4.1	5.3			
O4I 05T 405	0.55	0.75	380	1.6	2795	65	0.8	2.8	4.6	35	4x1.5	1.75
			400	1.7	2820	64	0.75	3.1	4.7			
			415	1.7	2835	63	0.71	3.4	4.7			
O4I 07T 405	0.75	1	380	2.2	2790	68	0.78	3.3	4.6	35	4x1.5	1.75
			400	2.3	2815	67	0.71	3.6	4.7			
			415	2.4	2825	65	0.67	3.9	4.6			
O4I 11T 405	1.1	1.5	380	2.9	2780	72	0.8	2.7	4.2	35	4x1.5	1.75
			400	3	2810	71	0.74	3	4.4			
			415	3.1	2820	70	0.7	3.2	4.3			
O4I 15T 405	1.5	2	380	4	2790	73	0.78	3	4.7	35	4x1.5	1.75
			400	4.2	2815	72	0.72	3.4	4.8			
			415	4.4	2825	70	0.68	3.7	4.7			
O4I 22T 405	2.2	3	380	5.6	2785	74	0.8	2.3	4.7	35	4x1.5	2.5
			400	5.8	2810	74	0.74	2.6	4.8			
			415	6.1	2825	73	0.69	2.7	4.7			
O4I 30T 405	3	4	380	7	2810	77	0.85	1.8	4.2	35	4x1.5	2.5
			400	7	2830	77	0.81	2	4.5			
			415	7.1	2845	77	0.77	2.2	4.6			
O4I 40T 405	4	5.5	380	9.5	2810	75	0.85	2.2	4.8	35	4x1.5	2.5
			400	9.5	2840	76	0.8	2.4	5			
			415	9.8	2850	75	0.76	2.6	5			
O4I 55T 405	5.5	7.5	380	13.2	2795	76	0.83	1.8	4.6	35	4x1.5	2.5
			400	13.3	2820	77	0.78	2	4.8			
			415	13.7	2840	77	0.73	2.2	4.9			
O4I 75T 405	7.5	10	380	17.9	2820	78	0.82	1.9	4.9	35	4x1.5	4
			400	18.1	2850	79	0.76	2.1	5.1			
			415	18.7	2860	78	0.71	2.3	5.1			

* Ts/Tn = ratio between starting torque and rated torque

Technical characteristics for E6W 6” submersible motors

Description

- Motors immersed in water.
- The choice of construction materials guarantees optimum performance, superior quality, reliability and easy installation.

Electrical and motor specifications

- Outer casing made of stainless steel.
- Shaft projection and coupling elevations compliant with the NEMA guidelines.
- Rewindable stator with PVC-insulated rewinding thread.
- Y insulation class motor.
- Protection class: IP68.
- Compensation bellows for expanding of liquid inside.
- Axial load supported by Kingsbury type segmented bearing.
- Mechanical seal with anti-sand protection.
- Maximum immersion depth: 350 m.
- Maximum number of start-ups per hour distributed on a fairy basis: 15.
- Maximum deviation allowed for line voltage compared to nominal voltage: ±10%.
- Maximum water temperature: 25°C.
- Max. temperature is taken for motors operating in a facility able to guarantee a water flow around the motor casing of at least 0,2 m/s (0,5 m/s at 37 kW).
- Axial thrust:
  16000 N from 4 to 22 kW;
  30000 N from 26 to 37 kW.
- Power cable for use in contact with drinking water.
  Versions:
  Three-phase: from 4 to 37 kW 380-415 V, 50 Hz.
- Motors fitted with double cable output for star-triangle start-up, on request.
- Horizontal operation in all versions, provided the axial thrust generated by the impellers always acts in the pump to motor direction.
- Screws included.

Executions on request

- Mechanical seal made of silica carbide.
- 4 poles motors.
- Special voltages.
- Wound for high temperatures.
- Applications with inverter.
- PT 100 temperature sensor.

Identification data

E6W | T | 110 | 40 | 5 | /A

- /A — Version
- 5 — 5 = 50 Hz / 6 = 60 Hz
- 40 — Rated voltage
- 110 — Rated voltage kW x 10
- T — M = single-phase / T = three-phase
- E6W — Serie

EXAMPLE: E6W110T405/A
Motor: E6W; Nominal power 11 kW. Three-phase; Nominal voltage 400 V. 50 Hz. Version /A

E6W series motors dimensions and weights

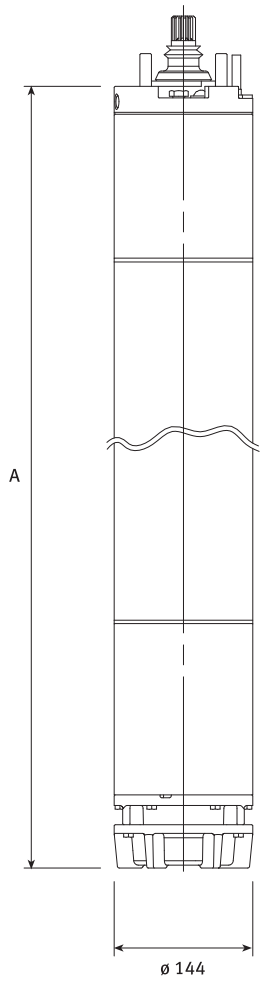

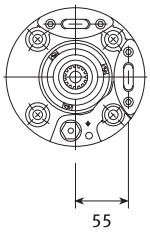

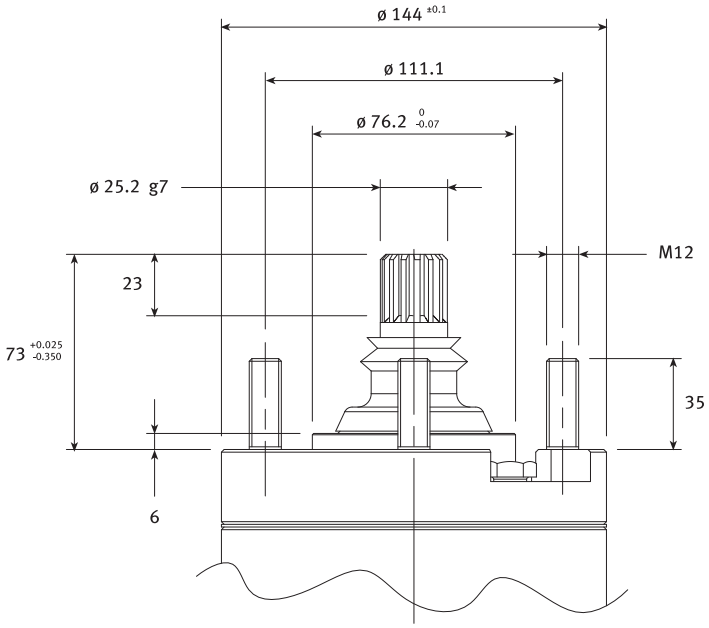

MOTOR	P2		DIMENSIONS (mm)	WEIGHT
TYPE	kW	HP	L	kg
E6WT 40-405	4	5.5	583	38
E6WT 55-405	5.5	7.5	613	42
E6WT 75-405	7.5	10	653	46
E6WT 93-405	9.3	12.5	683	50
E6WT 110-405	11	15	723	54
E6WT 130-405	13	17.5	763	58
E6WT 150-405	15	20	833	66
E6WT 185-405	18.5	25	903	74
E6WT 220-405	22	30	943	77
E6WT 260-405	26	35	1071	86
E6WT 300-405	30	40	1151	94
E6WT 370-405	37	50	1301	108

Three-phase E6W series motors operating characteristics 50 Hz

MOTOR TYPE	P2		RATED VOLTAGE	OPERATING CHARACTERISTICS				DIRECT START-UP		MAX. WATER TEMPERATURE	TYPE OF CABLE Ncxsez. (mm²)		
THREE-PHASE	kW	HP	V	RATED CURRENT A	rpm	η %	cosφ	Ts/Tn*	Is/In	°C	DOL	Y/D	L(m)
E6WT 40-405	4	5.5	380	9.62	2845	69.5	0.91	0.96	3.64	25	4		4
			415	8.94	2880	72.2	0.86	1.15	4.27				
E6WT 55-405	5.5	7.5	380	12.7	2850	74	0.89	1.28	4.27	25	4	4	4
			415	12.3	2885	74.7	0.83	1.54	4.82				
E6WT 75-405	7.5	10	380	17.1	2830	74.4	0.9	1.18	4.07	25	4	4	4
			415	16.4	2865	75.7	0.84	1.43	4.65				
E6WT 93-405	9.3	12.5	380	20.5	2835	76.6	0.89	1.51	4.57	25	4	4	4
			415	19.8	2870	77.6	0.83	1.82	5.16				
E6WT 110-405	11	15	380	24.8	2825	76.3	0.89	1.36	4.27	25	4	4	4
			415	24	2860	77.4	0.82	1.64	4.81				
E6WT 130-405	13	17.5	380	28.7	2820	76.6	0.9	1.37	4.38	25	4	4	4
			415	27.5	2860	77.9	0.84	1.66	4.99				
E6WT 150-405	15	20	380	32.4	2830	76.1	0.89	1.62	4.83	25	4	4	4
			415	31.1	2865	80.3	0.84	1.96	5.48				
E6WT 185-405	18.5	25	380	40	2835	80.3	0.87	1.8	5.10	25	6	4	4
			415	39.6	2865	80.4	0.81	2.17	5.63				
E6WT 220-405	22	30	380	48.5	2835	78.7	0.88	1.05	4.59	25	6	4	4
			415	45.4	2875	81.8	0.82	1.26	5.3				
E6WT 260-405	26	35	380	56.2	2865	80.2	0.88	1.03	4.57	25	6	4	4
			415	53.4	2890	81.9	0.83	1.24	5.25				
E6WT 300-405	30	40	380	64.7	2855	80.5	0.88	1.08	4.59	25	10	4	4
			415	61.4	2885	82.1	0.83	1.3	5.28				
E6WT 370-405	37	50	380	81.7	2840	78.6	0.88	1	4.24	20	10	4	4
			415	78.8	2875	79.8	0.82	1.2	4.81				

* Ts/Tn = ratio between starting torque and rated torque.

Description

- Motors immersed in water.
- The choice of construction materials guarantees optimum operating performance, superior quality, reliability and ease of installation.

Electrical and motor specifications

- Outer casing made of stainless steel.
- Projecting shaft element and coupling elevations based on the NEMA guidelines.
- Rewindable stator with PVC-insulated rewinding thread..
- Y insulation class motor.
- Protection class: IP68.
- Compensation bellows for expanding of liquid inside.
- Axial load supported by Kingsbury type segmented bearing.
- Mechanical seal with anti-sand protection.
- Maximum immersion depth: 350 m.
- Maximum number of start-ups per hour distributed on a fairy basis: 10.
- Maximum deviation allowed for line voltage compared to nominal voltage: ±10%.
- Maximum water temperature: 25°C.
- Max. temperature is taken for motors operating in a facility able to guarantee a water flow around the motor casing of at least 0,5 m/s.
- Axial thrust: 50000 N from 30 to 93 kW.
- Power cable for use in contact with drinking water.
- Versions:
  Three-phase: from 30 to 93 kW 380-415 V, 50 Hz.
- Motors fitted with double cable output for star-triangle start-up.

Executions on request

- Mechanical seal made of silica carbide.
- 4 pole motors.
- Special voltages
- Horizontal installation.
- Wound for high temperatures.
- Applications with inverter.
- PT 100 temperature sensor.

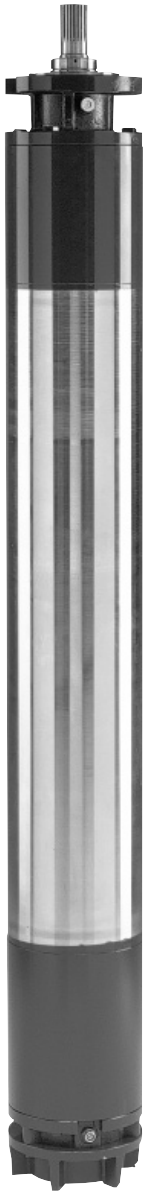

Identification data

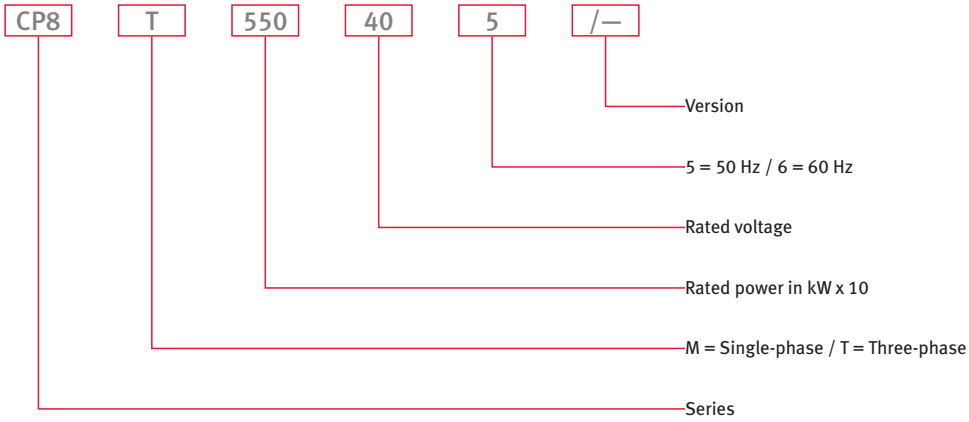

EXAMPLE: CP8550T405/A
Motor: CP8; Nominal powerl 550 kW. Three-phase; Nominal voltage 400 V. 50 Hz.

CP8 series motors dimensions and weights

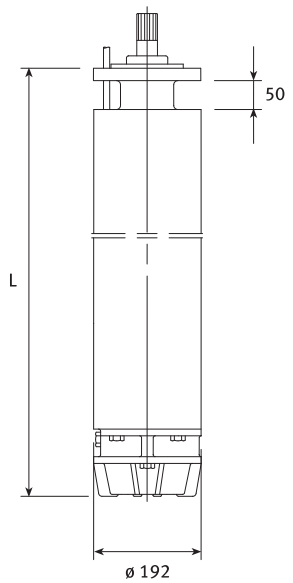

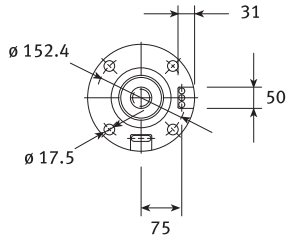

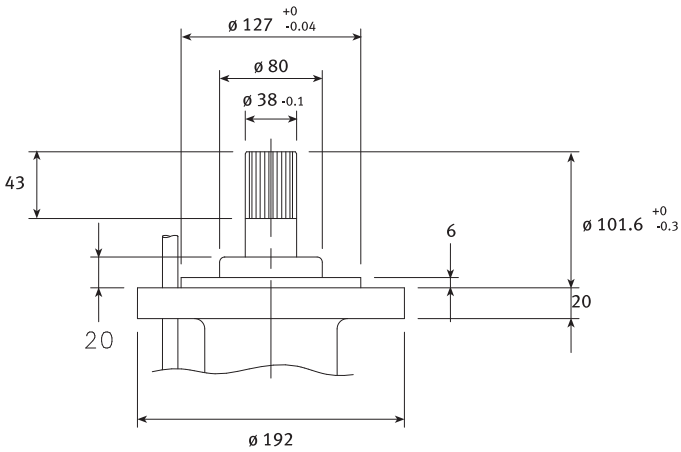

MOTOR TYPE	P2 kW	P2 HP	DIMENSIONS (mm) L	WEIGHT kg
CP8 300T 405	30	40	1015	145
CP8 370T 405	37	50	1105	162
CP8 450T 405	45	60	1195	180
CP8 520T 405	52	70	1285	200
CP8 550T 405	55	75	1325	206
CP8 600T 405	60	80	1375	217
CP8 670T 405	67	90	1465	235
CP8 750T 405	75	100	1555	252
CP8 830T 405	83	110	1615	265
CP8 930T 405	93	125	1755	290

Three-phase CP8 series motors operating characteristics 50 Hz

MOTOR TYPE THREE-PHASE	P2 kW	P2 HP	RATED VOLTAGE V	OPERATING CHARACTERISTICS WITH P2 RATED CURRENT A	rpm	η %	cosφ	DIRECT START-UP Ts/Tn*	Is/In	MAX. WATER TEMPERATURE °C	TYPE OF CABLE Sez. (mm²) DOL	Y/D	L(m)
CP8 300T 405	30	40	380	65	2905	83	0.85	1.2	4.67	25	10	6	5.5
			415	59	2900	836	0.84	1.09	4.7				
CP8 370T 405	37	50	380	81	2840	80.5	0.87	1.04	4.19	25	10	6	5.5
			415	76	2870	81.5	0.83	1.23	4.88				
CP8 450T 405	45	60	380	92	2850	82	0.87	0.92	3.72	25	16	6	5.5
			415	88.5	2880	83.5	0.83	1.09	4.23				
CP8 520T 405	52	70	380	110	2840	82	0.86	1.14	3.9	25	16	6	5.5
			415	104	2885	82.5	0.82	1.16	4.5				
CP8 550T 405	55	75	380	118	2840	82	0.87	1.26	3.57	25	16	10	5.5
			415	110	2885	82.5	0.83	1.27	4.19				
CP8 600T 405	60	80	380	124	2855	82	0.87	1.12	4.18	25	16	10	5.5
			415	118	2885	83.5	0.83	1.33	4.8				
CP8 670T 405	67	90	380	138	2850	82.5	0.88	0.98	4.22	25	16	10	5.5
			415	132	2885	83.5	0.83	1.16	4.82				
CP8 750T 405	75	100	380	156	2860	82	0.87	0.92	4.1	25	25	16	5.5
			415	148	2885	83	0.82	1.1	4.72				
CP8 830T 405	83	110	380	172	2860	83	0.87	0.91	4.12	25	35	16	5.5
			415	163	2880	84	0.82	1.08	4.66				
CP8 930T 405	93	125	380	192	2850	83	0.87	0.84	3.38	25	35	16	5.5
			415	180	2885	84	0.83	1	4.3				

* Ts/Tn = ratio between starting torque and rated torque.

XS6 Series

Accessories

50 Hz

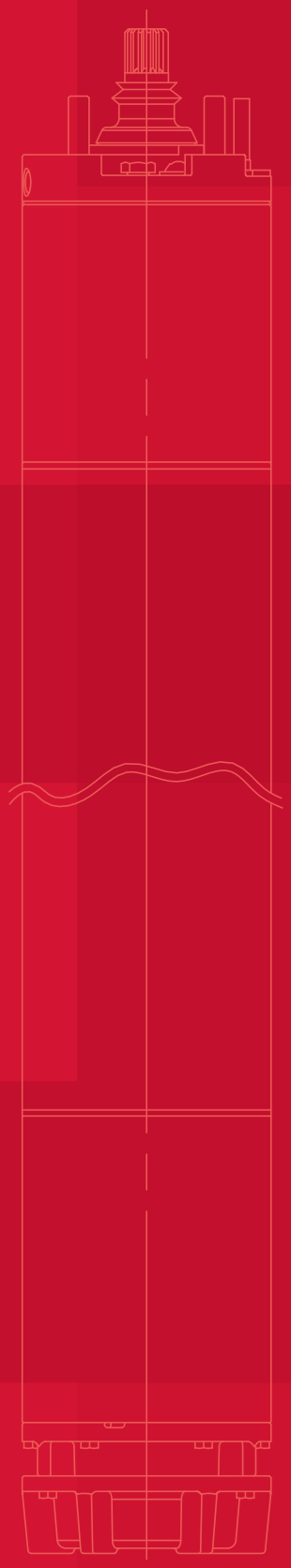

XS6 series water jackets

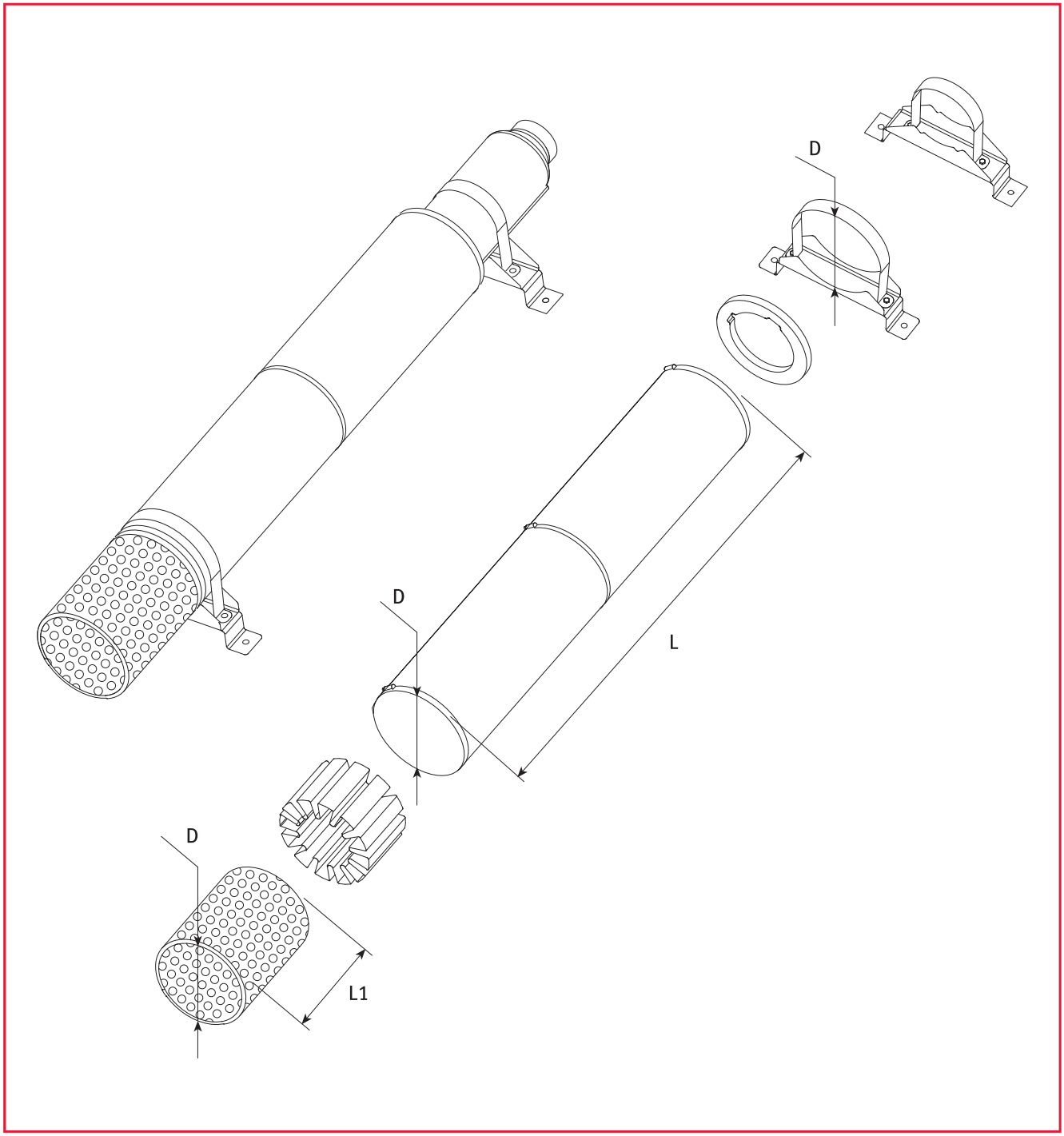

XS6 series water jackets, table for combining XS6 pumps with 4” and 6” motors

PUMP TYPE	MOTOR TYPE O4I/B	MOTOR TYPE E6W	CASINGS REFRIGERATION KIT (D x L)	FILTER REFRIGERATION KIT (D x L1)	SUPPORT REFRIGERATION KIT (D)
XS612 XS616 XS622 XS631 XS646	4 5.5 7.5		D160X1250	D160X158	D160X2
XS660	4 5,5 7,5		D180X1250	D180X192	D180X2
XS612 XS616 XS622 XS631 XS646		3 4 5,5 7,5 9,3	D180X1000	D180X192	D180X2
		11 13 15 18,5	D180X1250	D180X192	D180X2
		22 26 30 37	D180X1500	D180X192	D180X3
XS660		4 5,5 7,5	D200X1000	D200X192	D200X2
		9,3 11 13 15 18,5	D200X1250	D200X192	D200X3
		22 26 30 37	D200X1500	D200X192	D200X3

NOTE: Not available for raised height versions.

XS6 series with ISO threaded flanges

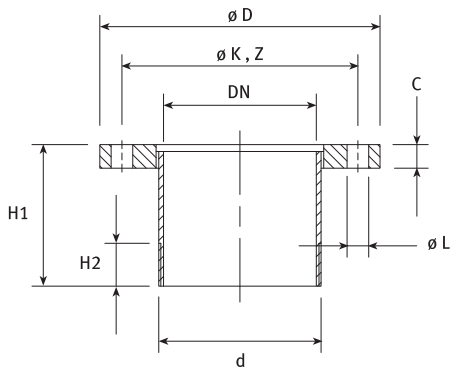

THREADING ISO 7-1	DIMENSIONS (mm) Flange in accordance with EN 1092-1								
d	DN	PN	ø D	ø K	Z	ø L	C	H1	H2
R 2 1/2	65	40	185	145	8	18	24	100	30
R 3	80	40	200	160	8	18	26	110	35
R 4	100	40	235	190	8	22	26	120	40

XS6 series support flanges

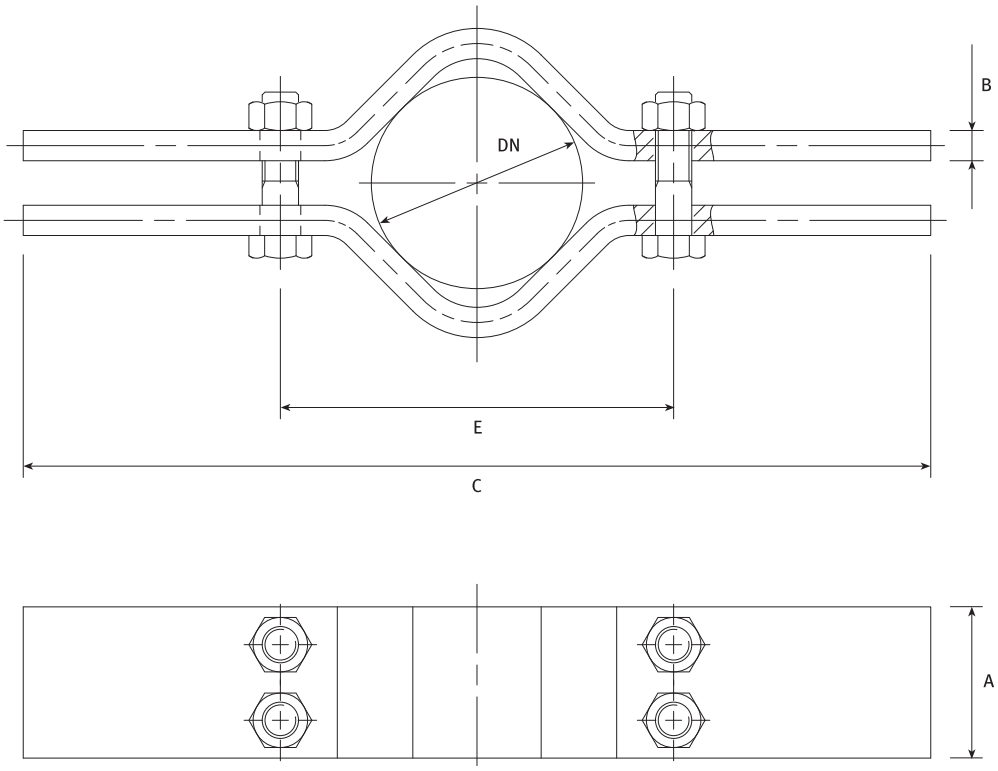

Ø NOMINAL PIPE DN		SUPPORT FLANGES DIMENSIONS (mm)					Pmax(1)	PIPE WEIGHT CLAMPED	THREADED	WATER
		A	B	C	E	VITE	kg	kg/m	kg/m	kg/m
65	R2 1/2	50	15	600	130	M16X90	1300	6.7	8	3.3
80	R 3	80	15	600	180	M20X70	3400	8.4	10.5	5
100	R 4	80	15	600	180	M20X110	3400	20.5	15	7.9

COLLECTING
MAKING POTABLE
PRESSURISING
RECIRCULATING
REUSING
EVACUATING
CLEANING

ESPA GROUP supporting you
with all the technology,
products and service you need.

www.espa.com

ESPA
Innovative Solutions

Flet 4004EN 06/08